Cummins®

Parts Catalog

QSB6.7 Tier 3

Industrial

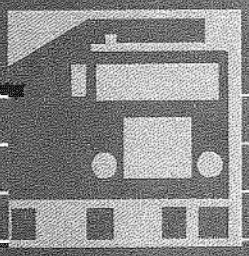

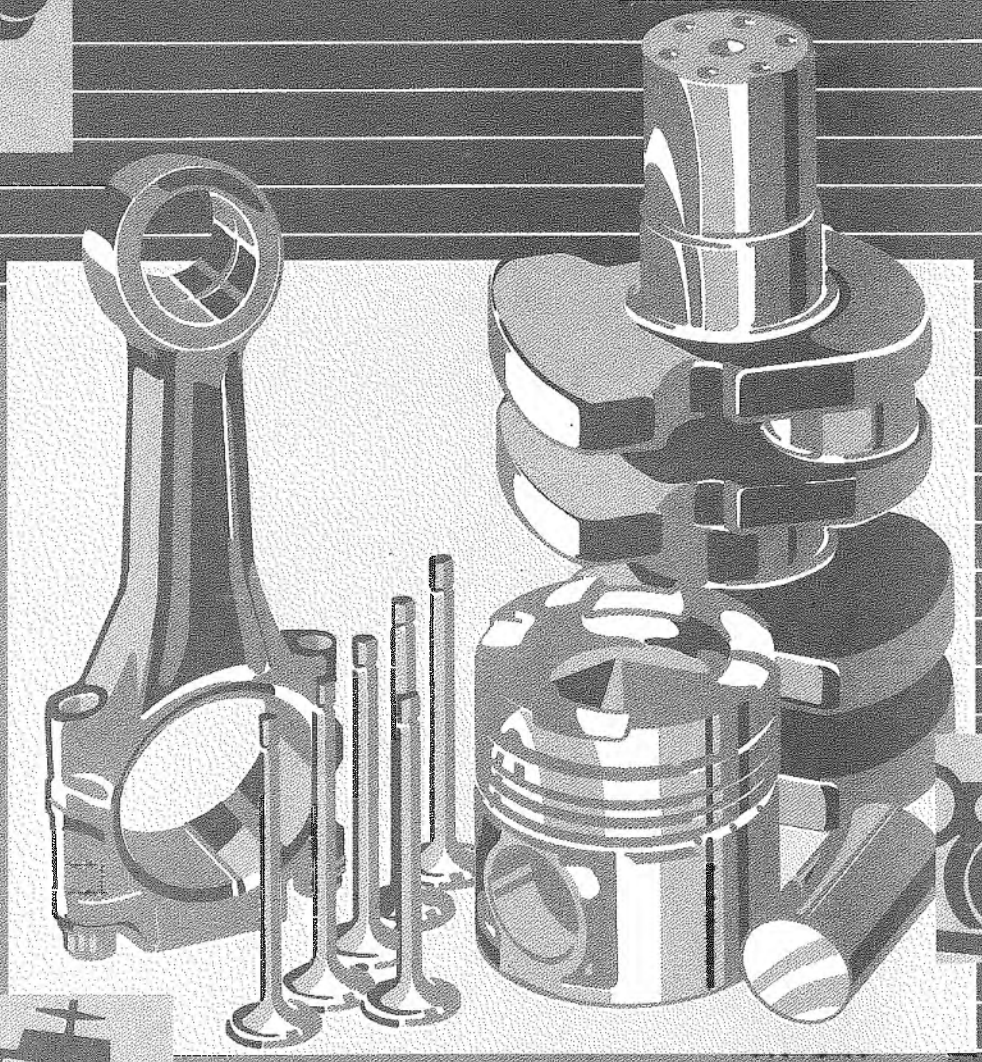

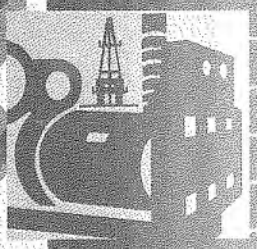

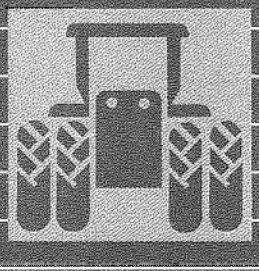

Parts Catalog

QSB6.7 Tier 3

Industrial

Cummins Inc.

New Parts Warranty
Midrange

COVERAGE

PRODUCTS WARRANTED

This warranty applies to New Parts marketed by Cummins for its A, B, and C Series engines. It applies anywhere in the world where service is available through a Cummins distributor or A, B, and C Series dealer.*

COVERAGE

This warranty covers any failures of parts on or after December 1, 1986, which result, under normal use and service, from defects in workmanship or material (Warrantable Failures). The coverage extends six months from the date of first installation.

This warranty continues to all subsequent Owners until the end of the period of coverage.

CUMMINS RESPONSIBILITIES

Cummins will pay for all parts and labor needed to repair the damage to the engine resulting from the Warrantable Failure. All labor costs will be paid in accordance with Cummins published Standard Repair Time guidelines.

Cummins will pay for the lubricating oil, antifreeze, filter elements, and other maintenance items that are not reusable due to the Warrantable Failure.

Cummins will pay reasonable labor costs for engine removal and reinstallation when necessary to make the warranty repair.

OWNER RESPONSIBILITIES

At the time when the parts are installed, Owner is responsible for the preparation of a written record containing the following: (1) the date of installation of the parts; (2) the engine serial number; (3) the engine miles, hours or kilometers of operation; (4) the parts installed, and (5) the location of the parts in the engine. The purpose of this record is to protect Owner's interests and support any claim for a Warrantable Failure.

Owner is responsible for the operation and maintenance of the engine as specified in Cummins Operation and Maintenance Manuals.

Before expiration of the warranty, Owner must give notice to a Cummins distributor or A, B, and C Series dealer* of a failure considered to be warrantable and deliver the engine to such facility for repair.

Owner is responsible for the cost of lubricating oil, antifreeze, filter elements and other maintenance items replaced during warranty repairs except where such items are not reusable due to a Warrantable Failure.

Owner is responsible for communication expenses, meals, lodging and similar costs incurred by Owner as a result of a Warrantable Failure. Owner is responsible for non-engine repairs and for "downtime" expenses, cargo damage and all business costs and losses resulting from a Warrantable Failure. **CUMMINS IS NOT RESPONSIBLE FOR INCIDENTAL OR CONSEQUENTIAL DAMAGES.**

(In the United States, some states do not allow the exclusion or limitation of incidental or consequential damages relating to Consumer Products, so the above limitation or exclusion may not apply to you.)

LIMITATIONS

Cummins is not responsible for failures resulting from Owner or Operator abuse or neglect, such as: operation without adequate coolant or lubricants; overfueling; overspeeding; lack of maintenance of lubricating, cooling or air intake systems; improper storage, starting, warm-up, run-in or shutdown practices. Cummins is also not responsible for failures caused by incorrect fuel, or by water, dirt or other contaminants in the fuel.

Except for fuel pumps, Cummins does not warrant parts supplied by Cummins which bear the name of another company. These parts are warranted by their manufacturers and not by Cummins. This category of parts includes, but is not limited to: hydraulic pumps, alternators, starters, fans, air conditioning compressors, clutches, filters, transmissions, torque converters, marine gears, air cleaners and non-Cummins air compressors, engine compression brakes, and steering pumps.

Parts used in warranty repairs may be new Cummins, Cummins approved rebuilt parts, or repaired parts. Cummins is not responsible for failures resulting from the use of parts not approved by Cummins.

Before a claim for excessive oil consumption will be considered, Owner must submit adequate documentation to show that consumption exceeds Cummins published standards.

This warranty does not apply to parts furnished by Cummins at no charge to the Owner.

THIS WARRANTY IS THE SOLE WARRANTY MADE BY CUMMINS IN REGARD TO THESE PARTS. CUMMINS MAKES NO OTHER WARRANTIES, EXPRESS OR IMPLIED, OR OF MERCHANTABILITY OR FITNESS FOR A PARTICULAR PURPOSE.

INVEST IN THE BEST

Product Identification Information

Data plates should be referred for parts identification.

1. ENGINE DATA PLATE

Cummins Inc. Box 3005 Columbus, Indiana 47202-3005	Engine Cert. I.D. Certificat d'dentite	C.I.D./L Pouce CubeL	MODEL MODELE	CPL	Family Famlle	FEL	EPA	CARB
					Catalyst No. Cayalysetur No.	NOX		
	Timing At Idle Cologe-a Rolenti			B.T.D.C. P.M.H.	Engine No. Moteur No.	PM		
Warning: Injury May Result and Warranty Is Voided If Fuel Rate RPM Or Attitudes Exceed Published Maximum Values For This Model And Application. AVERTESSEMENT: Danger de blessur es s' ennulation de la garantia, si de bit de combustible, hr/mn on atitudu, de' possant les valeurs maximum announce'es pour ce module et son ulitication.	Valve losh cold Jeux Soup. a Froid		Int. Adm	Exh. Ech.	Ref. No.			
	Firing Order Order dAllumage				Spark Plug Gap Ecartement des 'electrodes	1 n. Po		
Date of Mfg. Date of Fabrication	Idle Speed (rpm) V'tesse Rotenti		E.C.S.		Advertise HP Puiss. Indiquee (ch)	Ot a		rpm

1.Shop order number
2. Model designation
3. Engine serial number
4. Control parts list

This catalog was compiled by Bryan Priebe and Robert Cloney.

Customer Service Information

This standard Parts Catalog contains parts information for the following Cummins Engine Model(s):

QSB6.7 Tier 3 D313001CX03 CPL 8611

Certain basic engine components have been matched to give optimum performance to your engine. The part numbers listed in this catalog for these components are for a standard engine configuration. When ordering any of the Control Parts List (CPL) components listed below, please order by part description and engine serial number. Reference to the CPL number stamped on the engine data (name) plate will also help identify the proper service parts for your engine.

Control Parts List (CPL) Components

Fuel Pump	Page 23	**Engine Piston**	Page 55
Camshaft	Page 56	**Turbocharger**	Page 60
Cylinder Head	Page 59	**Exhaust Manifold**	Page 67
Injector	Page 57		

USER INFORMATION

- **Parts numbers appearing in ( ) are for identification purposes only and should not be used when ordering service replacement parts.**
- **The reference numbers appearing on the art pages is for publication use only.**
- **Assembly content is shown by part number indentation.**
- **Options are engineered production part groupings, specifically used for compiling engine orders.**
- **Option numbers are for reference only and are not sold for service.**
- **Use assembly and not option content to determine service parts replacement.**

ALWAYS SPECIFY ENGINE MODEL AND SERIAL NUMBER WHEN ORDERING PARTS FROM THIS CATALOG

Engine Model _____ Engine Serial No. _____

MFG Make _____ Model _____ Chassis No. _____

Fuel Pump Assembly No. _____ Injector No. _____

Belt, Fan _____ Belt, Water Pump _____ Belt, Gen. _____

Element, Fuel Filter _____ Full Flow Lub. Filter _____

Air Cleaner _____ By-Pass Lub. Filter _____

Special Equipment

_____

_____

_____

Table of Contents

	Page No.
Agency Approval	3
Air Heater Starting Aid	2
Air Intake Connection	33
Air Intake Manifold	37
Belt Tensioner	76
Cabin Heater Plumbing	32
Camshaft	56
Connecting Rod and Piston	55
Coolant Heater Starting Ai	11
Crankcase Breather	10
Crankshaft and Bearings	7
Cylinder Block	5
Cylinder Head	59
Engine Control Module	51
Engine Control Module Loca	52
Engine Control Wiring Harn	79
Engine Coolant Vent	66
Engine Oil Cooler	41
Flywheel Housing	19
Flywheel Mounting	28
Front Gear Cover	31
Fuel Filter	17
Fuel Filter Plumbing	15
Fuel Inlet Fitting	20
Fuel Plumbing	27
Fuel Pump	23
Fuel System Accessories	25
Injector	57
Injector Plumbing	63
Intake Connection Mounting	34
Lifting Arrangement	38, 39
Lube Oil Filter	42
Lubrication Oil Pump	46
Oil Filler Arrangement	47
Oil Level Gauge	45
Oil Pan	49
Rear Gear Housing	9
Rear Gear Train Accessory	13
Rocker Lever	65
Thermostat	14
Torque Converter Oil Coole	68
Turbocharger	60
Turbocharger Arrangement	67
Turbocharger Plumbing	71
Valve Cover Arrangement	72
Valve Tappets	8
Vibration Damper	12
Water Inlet Connection	73
Water Outlet Connection	74
Water Pump	75
Option Number Index	A-1
Part Number Index	B-1

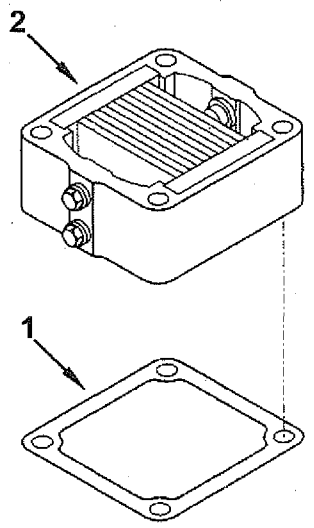

ah953gi

Ref No.	Part Number	Part Name	Req	Remarks
		AIR HEATER STARTING AID		
		OPTION AH9148		Air Heater Starting Aid Component Provided: Integral Heater Heater Voltage: 12 Heater Amperage: 190 Controls Provided: Yes Heater/Spacer Thickness (mm): 41.1 Heater/Spacer Bolt Pattern (mm): 75 X 80 Terminal Screw Length (mm): 10 Engine Aspiration: Charge Air Cooled Turbocharged
1	3969988	Gasket, Connection	1	
2	3970000	Heater, Intake Air	1	

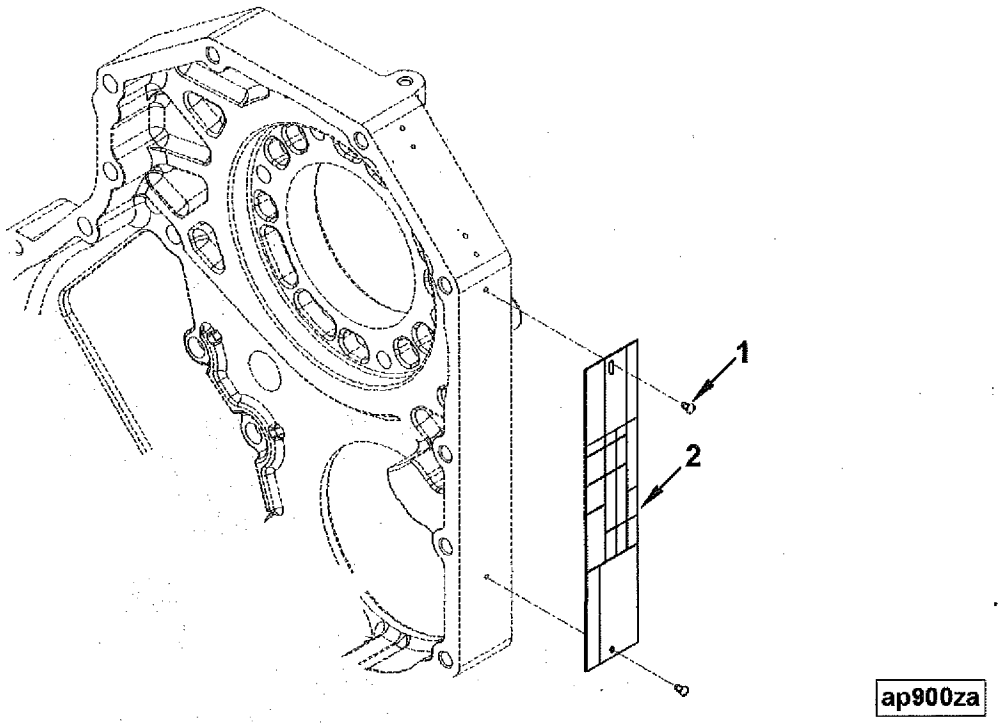

Ref No.	Part Number	Part Name	Req	Remarks
		AGENCY APPROVAL		
		OPTION AP9432		Agency Approval
1	3281692	Screw, Drive	2	
2	3931342	Dataplate	1	

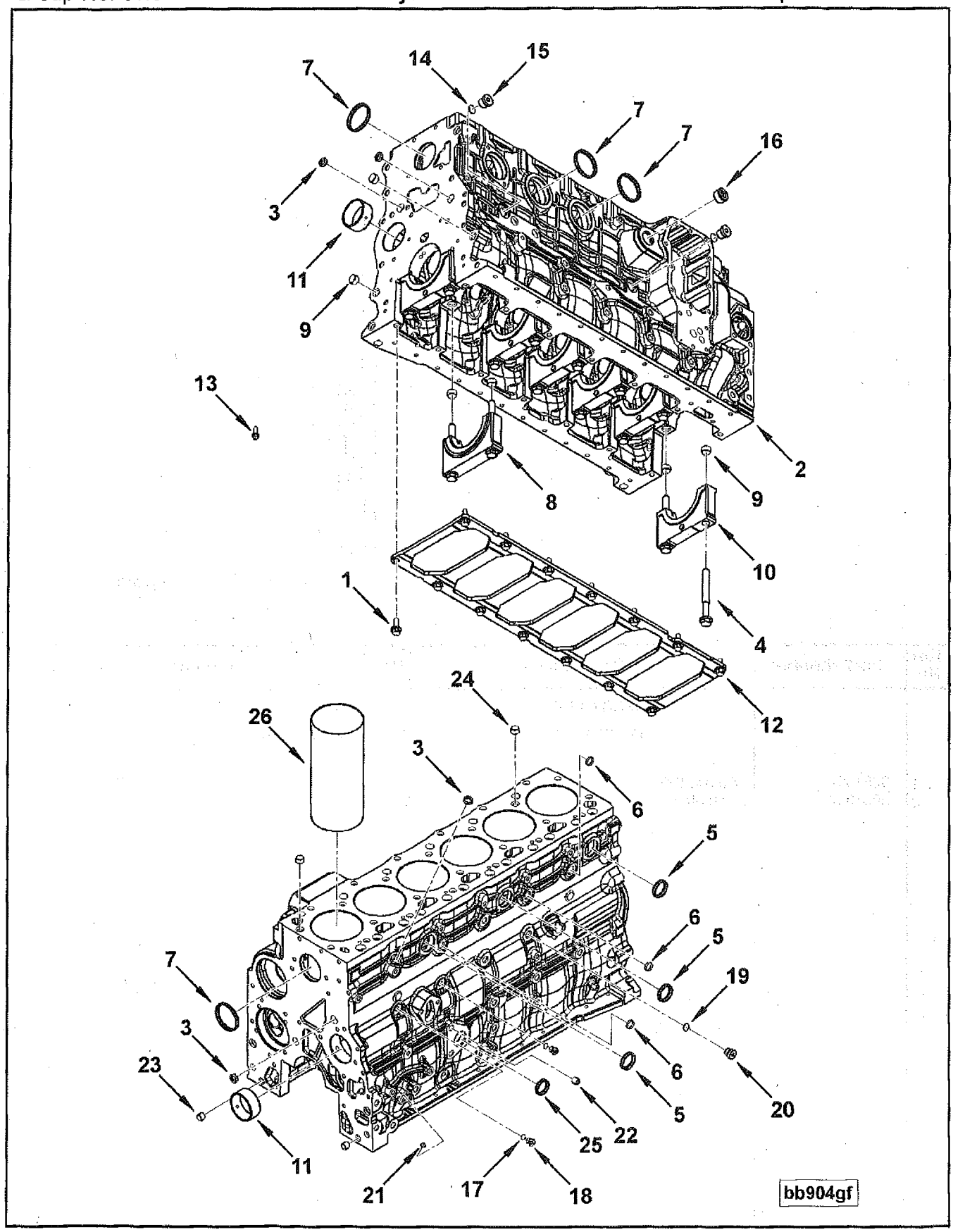
7
14
15
7
7
16
3
11
9
13
2
8
9
10
1
4
12
24
26
3
6
5
6
5
7
19
3
23
6
5
20
22
25
11
21
17
18
bb904gf

Ref No.	Part Number	Part Name	Req	Remarks
		CYLINDER BLOCK		
		OPTION BB9118		Cylinder Block
1	3902460	Screw, Hex Flange Head Cap	14	M10 X 1.50 X 25
	(3975957)	Block, Cylinder	1	
2	(3975110)	Block, Cylinder	1	
3	3900956	Plug, Expansion	3	
4	3927948	Screw, Hex Flange Head Cap	14	
5	3905401	Plug, Expansion	2	
6	3007635	Plug, Expansion	3	
7	3975796	Plug, Expansion	4	
	3974159	Cap, Main Bearing	1	
8	(3974158)	Cap, Main Bearing	1	
9	3900068	Dowel, Ring	2	
	3974157	Cap, Main Bearing	6	
9	3900068	Dowel, Ring	2	
10	(3974156)	Cap, Main Bearing	1	
11	3940059	Bushing	2	
12	3965764	Plate, Cyl Block Stiffener	1	
13	3921816	Screw, Hex Flange Head Cap	1	M8 X 1.25 X 45
	4089149	Kit, Cyl Block Hardware	1	
3	3900956	Plug, Expansion	4	
5	3905401	Plug, Expansion	3	
7	3922072	Plug, Expansion	4	
9	3900068	Dowel, Ring	2	
	3678873	Plug, Threaded	2	
14	3678786	Seal, O Ring	1	
15	(3678791)	Plug, Threaded	1	
16	3008469	Plug, Pipe	1	3/4 NPT
	3678923	Plug, Threaded	2	
17	3678912	Seal, O Ring	1	
18	(3680419)	Plug, Threaded	1	
	3680420	Plug, Threaded	1	
19	3678925	Seal, O Ring	1	
20	(3678924)	Plug, Threaded	1	
21	3900955	Plug, Expansion	2	
22	3947092	Insert, Threaded	1	
23	3949326	Dowel, Ring	2	
24	3902343	Dowel, Ring	2	
25	3900958	Plug, Expansion	1	
		Service Parts		
26	3904166	Sleeve, Salvage	A/R	

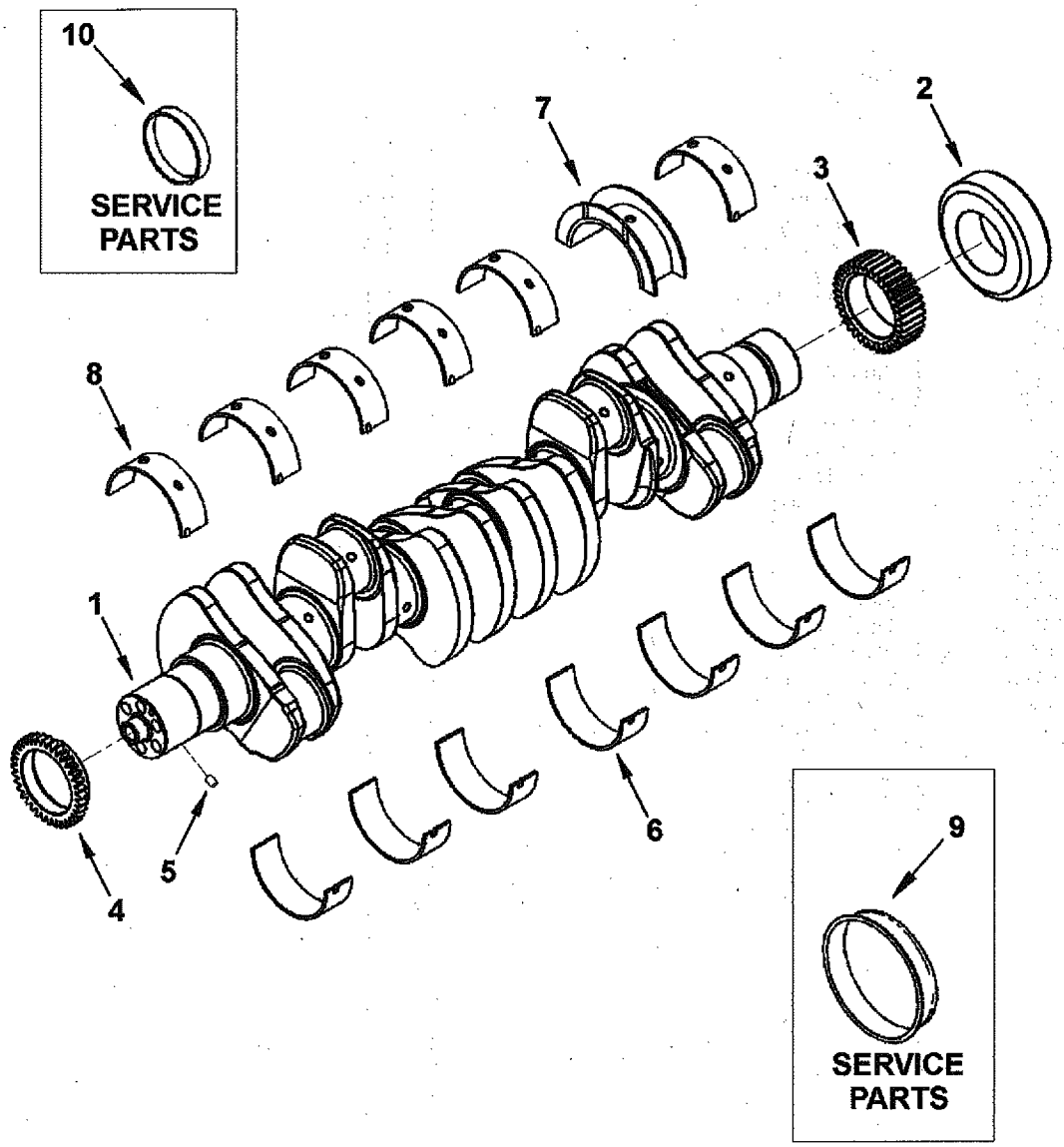
10
SERVICE PARTS
7
2
3
8
1
4
5
6
9
SERVICE PARTS
bb904ge

Ref No.	Part Number	Part Name	Req	Remarks
		CRANKSHAFT AND BEARINGS		
		OPTION BB9118		Crankshaft and Bearings
	(3974635)	Crankshaft, Engine	1	
	3974538	Crankshaft, Engine	1	
1	(3968164)	Crankshaft, Engine	1	
2	(2831066)	Collar, Shaft	1	
3	3955150	Gear, Crankshaft	1	
4	3955151	Gear, Crankshaft	1	
5	3904483	Dowel, Pin	1	
	3357480	Set, Main Brg	1	Standard
6	3929021	Bearing, Main	7	
7	3927772	Bearing, Crankshaft Thrust	1	
8	3929016	Bearing, Main	6	
	3802071	Set, Main Brg(.010)	A/R	0.25 mm Oversize
6	(3929022)	Bearing, Main	7	
7	(3283065)	Bearing, Crankshaft Thrust	1	
8	3929017	Bearing, Main	6	
	3802072	Set, Main Brg(.020)	A/R	0.50 mm Oversize
6	(3929023)	Bearing, Main	7	
7	(3283066)	Bearing, Crankshaft Thrust	1	
8	3929018	Bearing, Main	6	
	3802073	Set, Main Brg(.030)	A/R	0.75 mm Oversize
6	(3929024)	Bearing, Main	7	
7	(3283067)	Bearing, Crankshaft Thrust	1	
8	3929019	Bearing, Main	6	
	3802074	Set, Main Brg(.040)	A/R	1.00 mm Oversize
6	(3929025)	Bearing, Main	7	
7	(3283068)	Bearing, Crankshaft Thrust	1	
8	3929020	Bearing, Main	6	
		SERVICE PARTS		
9	3926126	Kit, Wear Sleeve	A/R	Rear Seal
10	3802820	Kit, Wear Sleeve	A/R	Front Seal

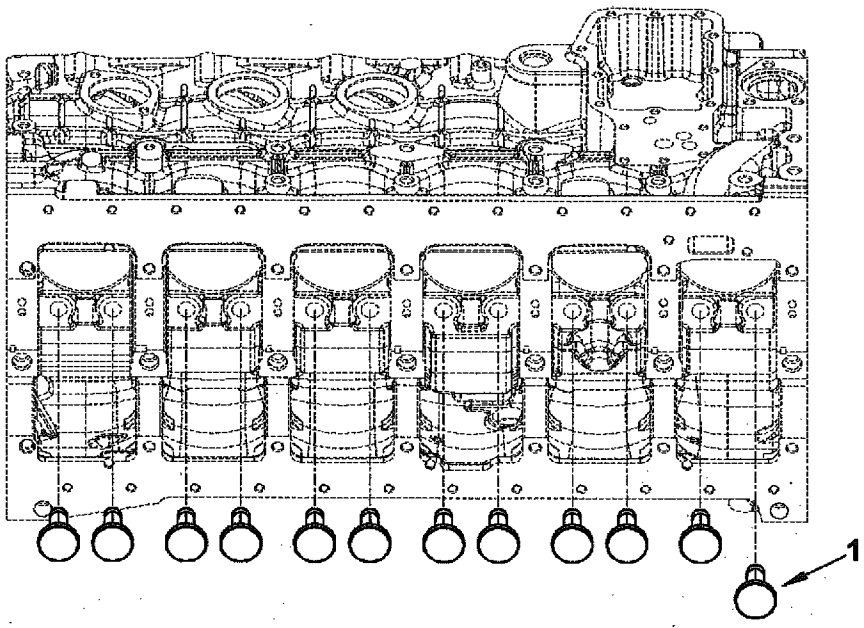

Ref No.	Part Number	Part Name	Req	Remarks
		VALVE TAPPETS		
		OPTION BB9118		Valve Tappets
1	3947759	Tappet, Valve	12	

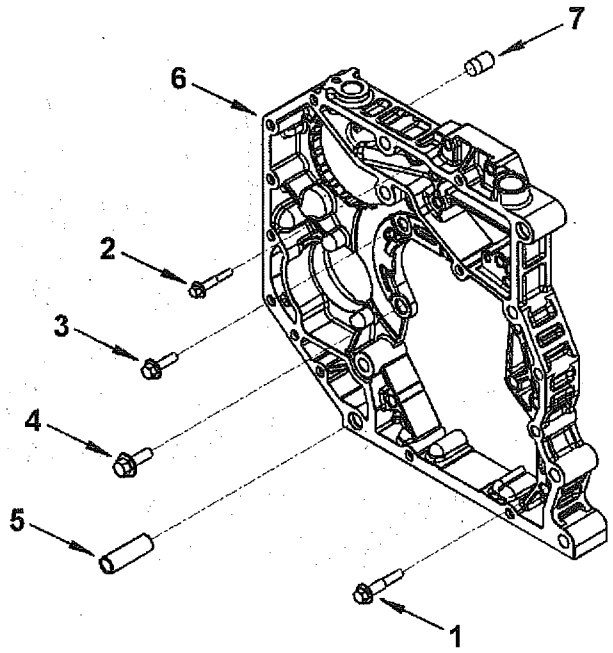

bb903gl

Ref No.	Part Number	Part Name	Req	Remarks
		REAR GEAR HOUSING		
		OPTION BB9131		Rear Gear Housing
1	3918153	Screw, Hex Flange Head Cap	3	M10 X 1.50 X 50
2	3901445	Screw, Hex Flange Head Cap	4	M8 X 1.25 X 45
3	3903112	Screw, Hex Flange Head Cap	2	M10 X 1.50 X 30
4	3910495	Screw, Hex Flange Head Cap	1	M12 X 1.75 X 30
	3971015	Housing, Gear	1	
5	3954616	Dowel, Ring	2	
6	3971012	Housing, Gear	1	
7	4929128	Insert, Threaded	2	

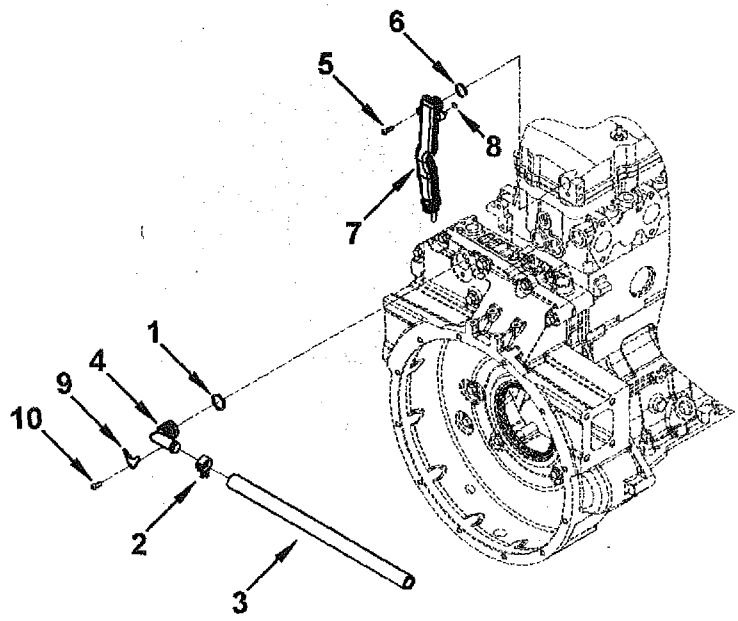

br953go

Ref No.	Part Number	Part Name	Req	Remarks
		CRANKCASE BREATHER		
		OPTION BR9191		Crankcase Breather System Type: Non CCV Location: Flywheel Housing Vent Size: 19.05 Outlet can be Rotated to Suit OEM Around Horizontal Axis. Factory set at 8 o'clock to Following: Vent Location From CL of Crank (mm): 256 Vent Location from CL of Engine (mm): 180.7 Engine Angularity Limit: 32 Deg
1	145530	Seal, O Ring	1	
2	3917995	Clamp, Spring Hose	1	
3	3918614	Hose, Plain	1	
4	3966164	Breather, Crankcase	1	
5	3977572	Screw, Round Head Cap	2	
	3971371	Tube, Breather	1	
6	145528	Seal, O Ring	2	
7	3968786	Tube, Breather	1	
8	3970042	Seal, O Ring	1	
9	4899498	Plate, Clamping	1	
10	4899706	Screw, Round Head Cap	1	

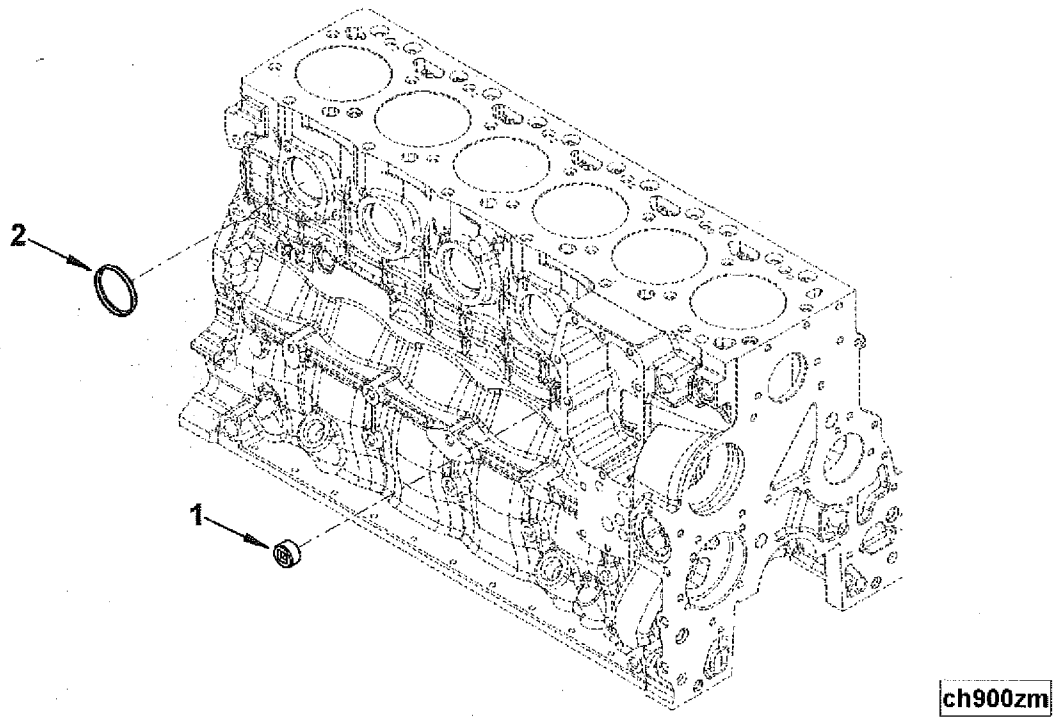

Ref No.	Part Number	Part Name	Req	Remarks
		COOLANT HEATER STARTING AI		
		OPTION CH9070		Coolant Heater Starting Aid
				When no Heater is Required.
1	3008469	Plug, Pipe	1	3/4 NPT
2	3922072	Plug, Expansion	1	

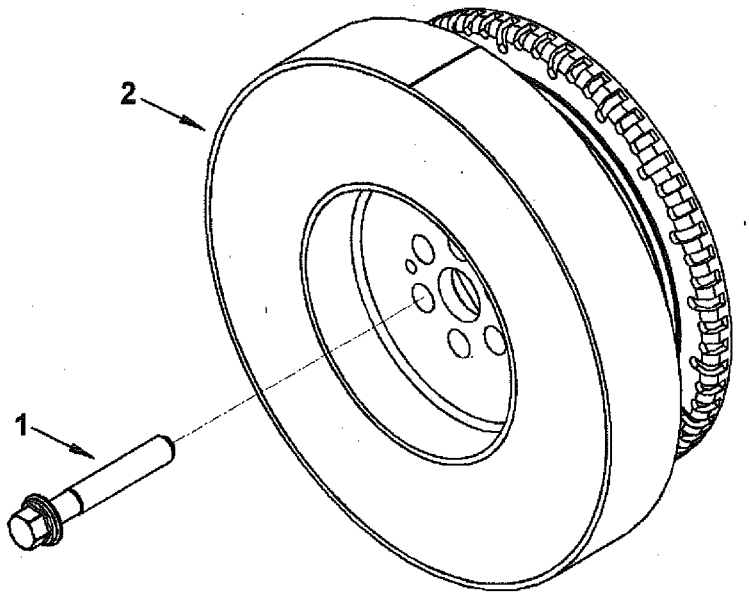

da951gz

Ref No.	Part Number	Part Name	Req	Remarks
		VIBRATION DAMPER		
		OPTION DA9181		Vibration Damper Crank Pulley Type: Cast 8 Groove Crank Pulley Groove Profile: Poly V 8 Rib K Crank Pulley Diameter (mm): 174.5 Over Balls (mm): 2.5 Engine Speed Sensing: Yes Engine Position Sensing: Yes FFOB to CL of First Crank Pulley Groove (mm): 51.78 Crank Bolt Circle (mm): 50 Damper Type: Viscous Damper Diamter (mm): 245
1	3968075	Screw, Captive Washer Cap	6	
2	3977926	Damper, Vibration	1	

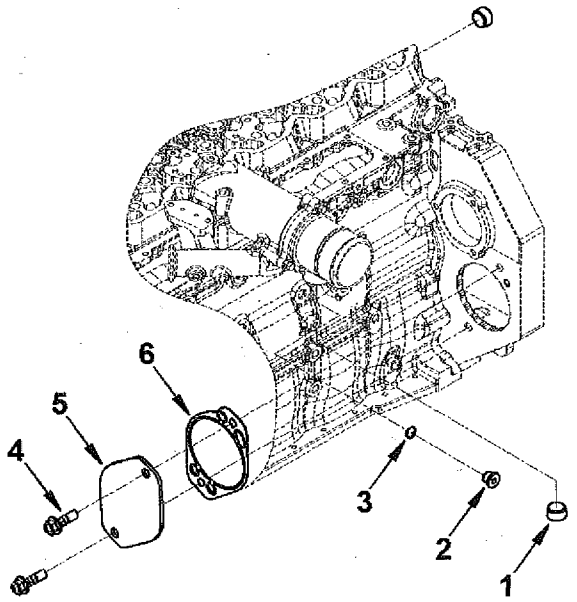

dr900gb

Ref No.	Part Number	Part Name	Req	Remarks
		REAR GEAR TRAIN ACCESSORY OPTION DR9701		Rear Gear Train Accessory Drive Mounting Rear Gear Drive PTO: Customer Supplied Compressor or no Compressor Provision or no Hydraulic Pump Drive Adapter. Cover Plate Provided: Yes To Suit Gear Housing Pilot Bore (mm): 101.6 Includes Plugs to Plug Compressor Water Provision.
1	3008469	Plug, Pipe	1	3/4 NPT
	3089567	Plug, Threaded	1	
2	(3089568)	Plug, Threaded	1	M16 X 1.50
3	3679139	Seal, O Ring	1	
4	3910495	Screw, Hex Flange Head Cap	2	M12 X 1.75 X 30
5	3914868	Plate, Cover	1	
6	4896897	Gasket, Acc Drive Cover	1	

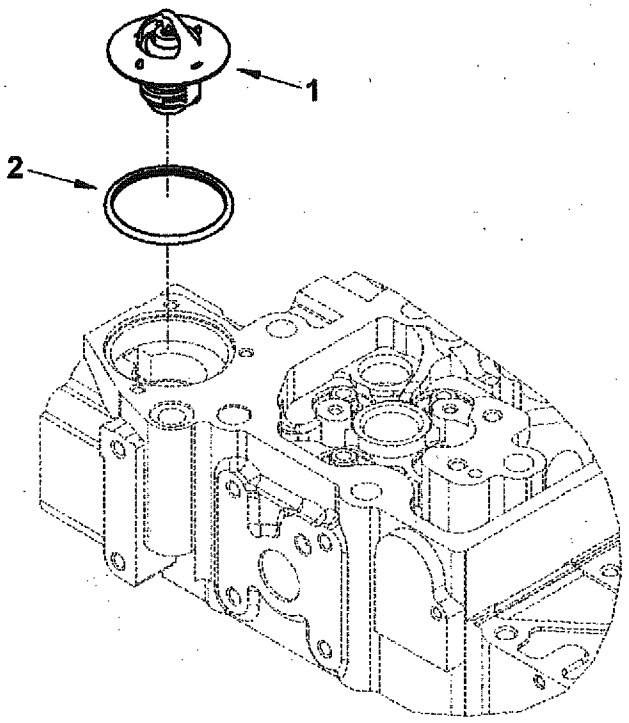

Ref No.	Part Number	Part Name	Req	Remarks
		THERMOSTAT		
		OPTION EC9044		Thermostat Thermostat Opening Temperature: 87.8 C Number of Thermostats: 1 Thermostat Type: Non-Balanced or Poppet Vented Non-Vented: Vented With Jiggle-Pin By-Pass Type: Mechanical Plug Required Housing Bore Diameter: 60.96 mm (2.4") Low Gain Thermostat: Yes One Notch High Metal Weir D-Ring Seal. Material: Nitrile
	3974371	Thermostat	1	
1	3973835	Thermostat	1	
2	3954829	Seal, Thermostat	1	

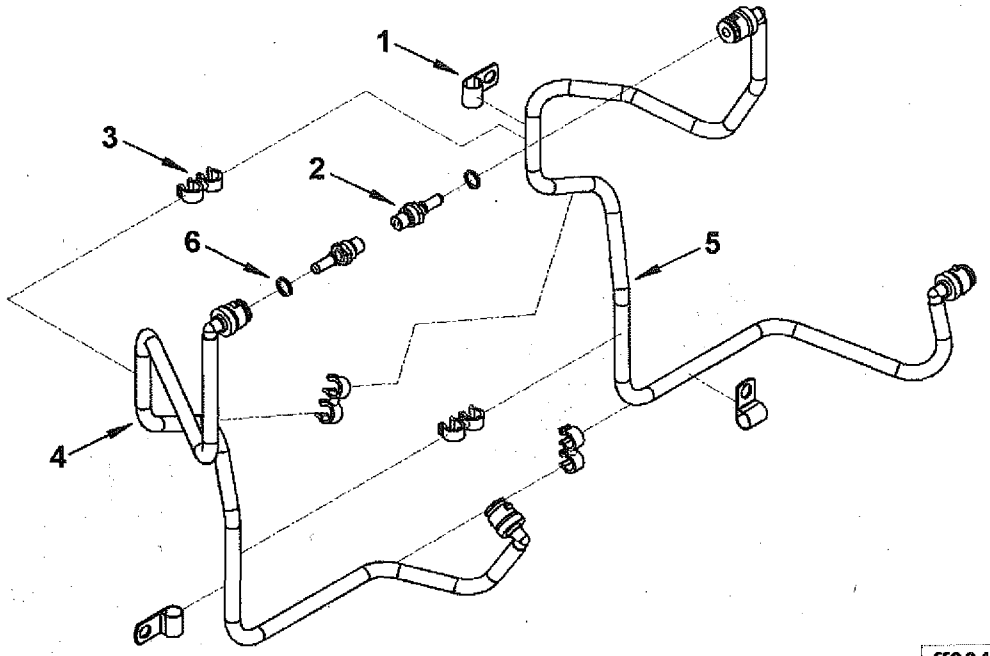

ff964gk

Ref No.	Part Number	Part Name	Req	Remarks
		FUEL FILTER PLUMBING		
		OPTION FF9573		Fuel Filter Plumbing Pump Manufacturer/Model: Bosch Common Rail Governor Type: Electronic Boost Control Provision: With Mounting Location: Fuel Pump Side - Low Mount Fuel Plumbing: Quick Connect Santoprene Coated Tubes with SAE J2044 Connectors.
1	68152	Clip	3	
2	3964337	Connector, Qck Disconnect	2	
	3978703	Tube, Fuel Supply	1	
3	4899288	Clip	4	
4	3978704	Tube, Fuel Supply	1	
5	3978706	Tube, Fuel Supply	1	
6	4891385	Washer, Sealing	2	

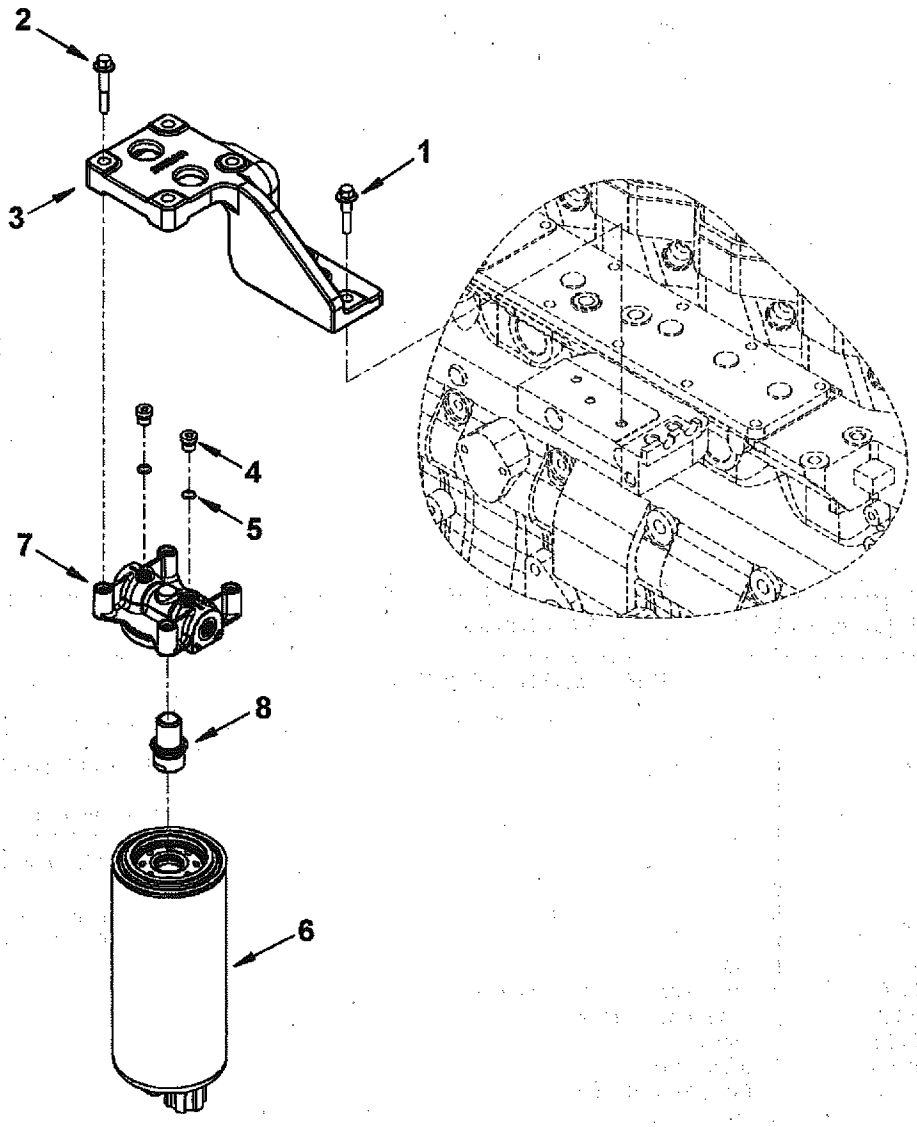

ff905zm

Ref No.	Part Number	Part Name	Req	Remarks
		FUEL FILTER		
		OPTION FF9579		Fuel Filter
				Element Type: Single Element Style: Spin-on Drain Provision: No Fuel Heater Voltage: None Water Separator Provision: No Water in Fuel Sensor (WIF): No Water in Fuel Sensor (WIF) Harness Provided: No Location (mm): Engine Mounted From CL to Top of Canister: 417 From Engine CL to Canister CL: 316 From FFOB to Canister CL: -324 Filter Length (mm): 191 Fuel Filter Fuel Inlet Location (mm): Vertical From Crank to CL: 438.9 Horizontal From Engine CL: 316.0 Horizontal From FFOB: -273.6 Fuel Filter Fuel Outlet Location (mm): Vertical From Crank to CL: 438.9 Horizontal From Engine CL: 316.0 Horizontal From FFOB: -374.5 Absolute Filtration (Microns): 3
1	3900632	Screw, Hex Flange Head Cap	3	M8 X 1.25 X 35
2	3901445	Screw, Hex Flang	4	M8 X 1.25 X 45
3	3955081	Support, Filter	1	
	3975125	Filter, Fuel	1	
	3678923	Plug, Threaded	2	
4	3678924	Plug, Threaded	1	
5	3678925	Seal, O Ring	1	
6	(3978040)	Filter, Fuel	1	Purchase From Fleetguard
7	(3969680)	Head, Fuel Filter	1	Purchase From Fleetguard
8	3975396	Adapter, Filter Head	1	

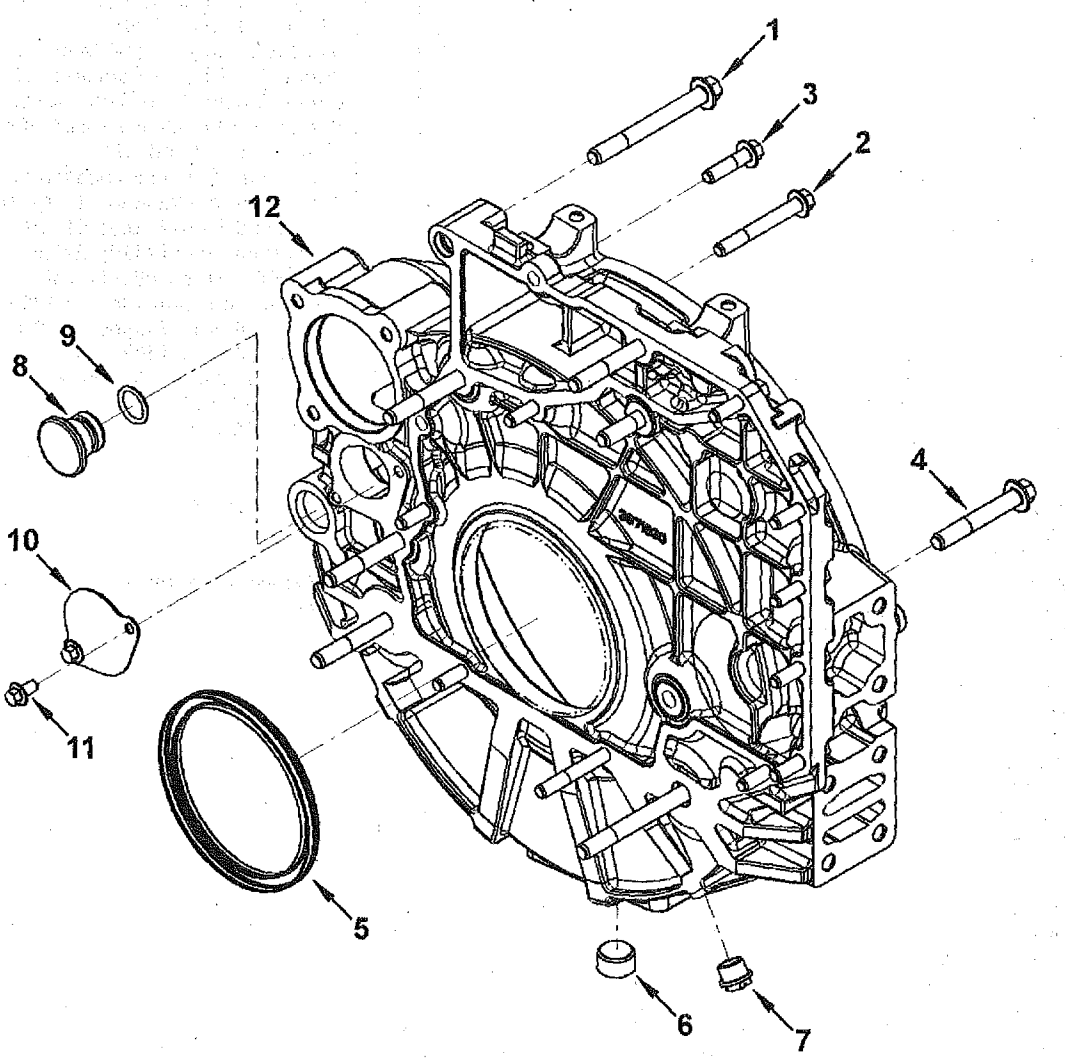

fh955gb

Ref No.	Part Number	Part Name	Req	Remarks
		FLYWHEEL HOUSING		
		OPTION FH9481		Flywheel Housing Clutch Type: Dry Starter Bore Position: 55 FH to Block Pattern: 8 X M12 X 1.75 + 2 X M10 X 1.5 SAE Size: 3 Starter Pilot Bore Diameter: 88.9 Starter Bore Location Horiz From Crank CL: -177.26 Vert From Crank CL: 124.12 Starter Mounting Hole Pattern Angle: 0 Starter Mounting Hole Thread Size: M10 Starter Mounting Face Offset From RFOB: 41.2 Starter Motor Center Distance (mm): 216.4 Tach Sensor Hole Location: 3RD Quadrant Tachometer Sensor Hole Count: 1 Tachometer Sensor Hole Thread Size: 3/4-16 UNF Material: Aluminum Engine Mount Type: Pad MTG Pad Hole Description: 8 X M12 X 1.75 per Side Mounting Pad Top Hole Location From Crank CL (mm): 84.68 Mounting Pad Angle From Vertical (Deg): 0 Transmission Mounting Hole Count: 12 Transmission Mounting Hole Thread Size: M10 X 1.5-6H Distance Across Mounting Surface (mm): 490 Suitable for +/- 6G Vertical, +/- 4G Axial, and +/- 2G Lateral Load with 409KG Transmission.
1	3089188	Screw, Hex Flange Head Cap	2	
2	3900679	Screw, Hex Flange Head Cap	2	M10 X 1.50 X 80
3	3903464	Screw, Hex Flange Head Cap	10	M10 X 1.50 X 40
4	3914177	Screw, Hex Flange Head Cap	6	M12 X 1.75 X 80
5	(3970548)	Seal, Oil	1	Serviced as 4089342
	(3973088)	Housing, Flywheel	1	
6	3008469	Plug, Pipe	1	3/4 NPT
7	3904181	Plug, Threaded	1	3/4 - 16 UNF
8	3910248	Plug, O Ring	1	
9	3910260	Seal, O Ring	1	
10	3925234	Plate, Cover	1	
11	3925883	Screw, Hex Flange Head Cap	2	M8 X 1.25 X 16
12	3971631	Housing, Flywheel	1	
		SERVICE PARTS		
	4089342	Kit, Crankshaft Seal	A/R	
5	(3970548)	Seal, Oil	1	Serviced as 4089342
	3909409	Tool, Seal Installation	1	
	(4089425)	Tool, Seal Installation	1	

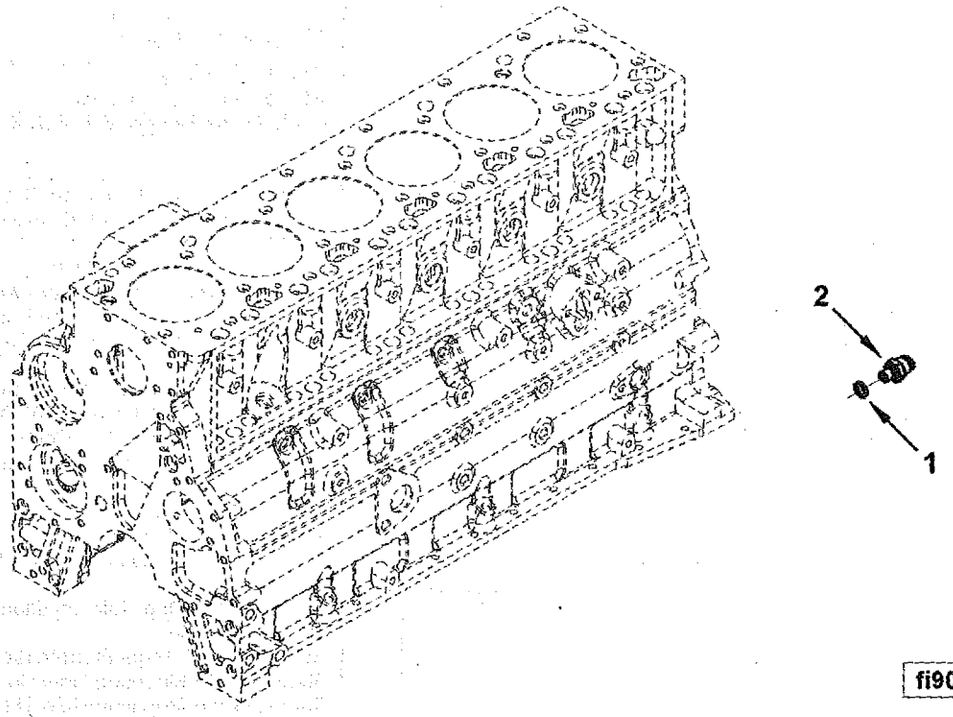

Ref No.	Part Number	Part Name	Req	Remarks
		FUEL INLET FITTING		
		OPTION FI9053		Fuel Inlet Fitting Fuel Inlet Fitting Supplier: Cummins Fuel Inlet Fitting Type: Straight OEM Attachment: #8 Hose, 45 Deg Flare Single Bead.
1	3963983	Washer, Sealing	1	M12
2	3954145	Adapter, Fuel Connector	1	

NOTES

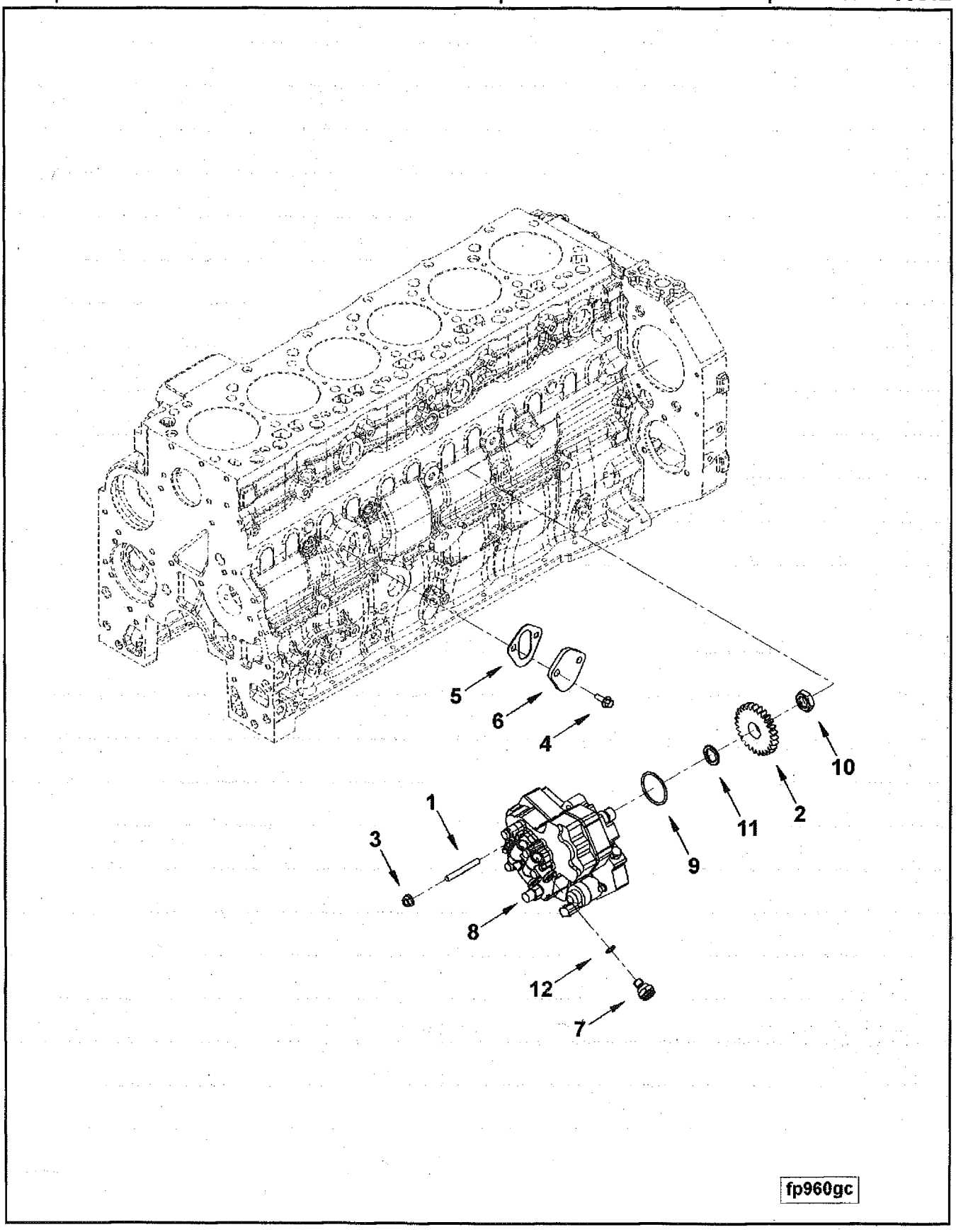
5
6
4
10
2
11
9
1
3
8
12
7
fp960gc

Ref No.	Part Number	Part Name	Req	Remarks
		FUEL PUMP		
		OPTION FP90312		Fuel Pump Fuel Pump Manufacturer/Model: Bosch Common Rail Pressure Capability: 1600 BAR SAE Flange Type: SAE J626 AUG 93 Non-Standard Type 2 Pilot Shaft Diameter (mm): 80 Fuel Pump Inlet: M12 X 1.5 Fuel Pump Drain: SAE J2044 Location: Low DEP may Substitute Gear 4893389 for 3955153.
1	3954498	Stud	3	
2	3955153	Gear, Fuel Pump	1	
3	3900589	Nut, Hexagon Flange	3	M8 X 1.25
4	3900630	Screw, Hex Flange Head Cap	2	M8 X 1.25 X 20
5	3939258	Gasket, Cover Plate	1	
6	3948083	Plate, Cover	1	
	3975701	Pump, Fuel Injection	1	
7	3974765	Connector, Qck Disconnect	1	
8	(3975700)	Pump, Fuel Injection	1	
9	2830977	Seal, O Ring	1	
10	4890634	Nut, Regular Hexagon	1	
11	4890635	Washer, Spring	1	
12	4891385	Washer, Sealing	1	

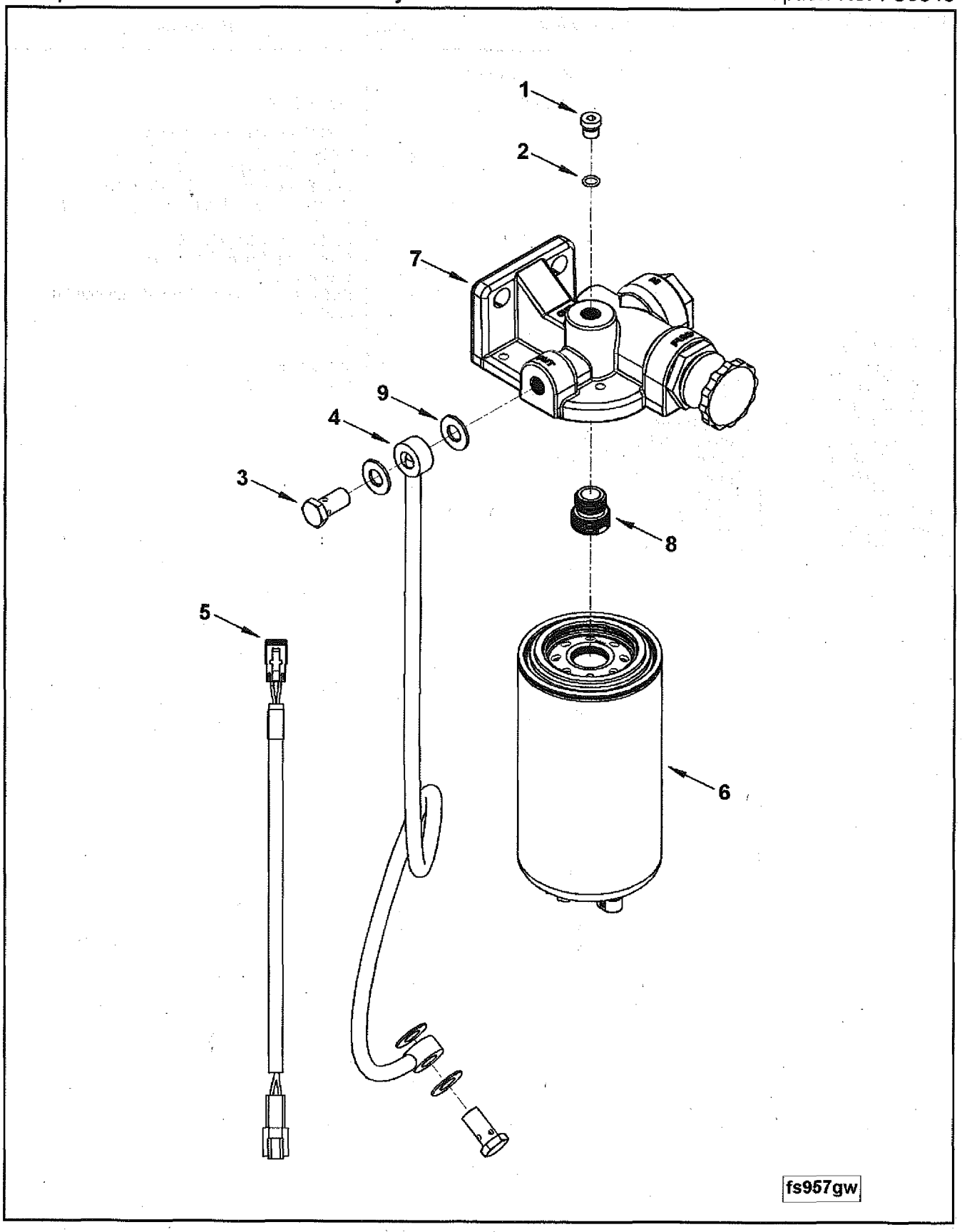
1
2
7
9
4
3
8
5
6
fs957gw

Ref No.	Part Number	Part Name	Req	Remarks
		FUEL SYSTEM ACCESSORIES		
		OPTION FS9843		Fuel System Accessories Element Type: Single Element Style: Spin-on Primimg Provision: Yes Drain Provision: Yes Fuel Heater Voltage: None Water Separator Provision: Yes Water in Fuel Sensor (WIF): Yes Water in Fuel Sensor (WIF) Harness Provided: Yes Water in Fuel Sensor Harness Length (ft): 6 Location: Off Engine Hose Length (ft): 6 Absolute Filtration (Microns): 25
	3678923	Plug, Threaded	1	
1	3678924	Plug, Threaded	1	
2	3678925	Seal, O Ring	1	
3	3903035	Screw, Banjo Connector	2	
4	3944458	Hose, Flexible	1	
5	3954786	Harness, Wiring	1	
	3975126	Filter, Fuel	1	
6	(3973233)	Filter, Fuel	1	Fleetguard P/N FS19732
7	(3975404)	Head, Fuel Filter	1	Purchase From Fleetguard
8	3975405	Adapter, Filter Head	1	
9	3963983	Washer, Sealing	4	

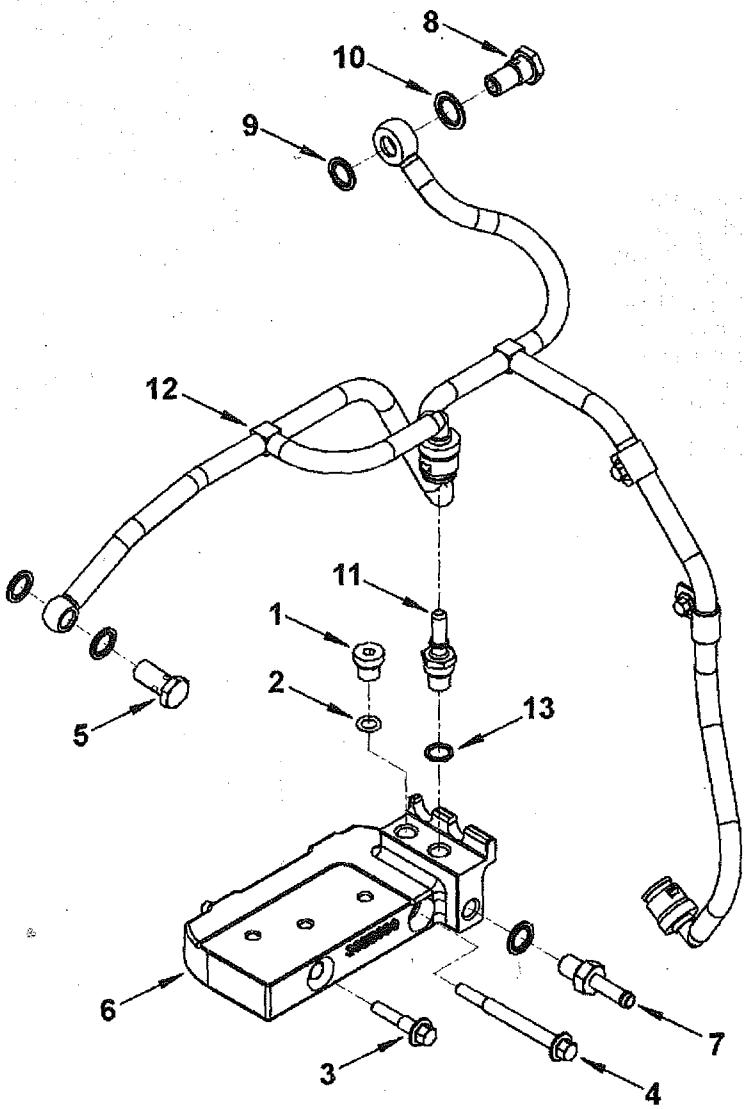

ft959ga

Ref No.	Part Number	Part Name	Req	Remarks
		FUEL PLUMBING		
		OPTION FT9111		Fuel Plumbing Fitting Type: SAE J2044 Fitting Supplier: Cummins Orientation: Horizontally OEM Attachment: 8 mm Push On Single Bead. OEM Drain Fitting Location (mm): CL of Engine: 335.0 CL of Crank: 373.0 FFOB: -532.0 Cylinder Head Fuel Drain Location (mm): CL of Engine: 16.0 CL of Crank: 391.5 FFOB: -756.5 Common Rail Fuel Drain Location (mm): CL of Engine: 216.0 CL of Crank: 412.0 FFOB: -289.5 Fuel Pump Drain Location (mm): CL of Engine: 291.5 CL of Crank: 55.0 FFOB: -695.0 Unique Characteristics: For use With Low Mount Pump.
	3678610	Plug, Threaded	1	
1	(3678602)	Plug, Threaded	1	
2	3678603	Seal, O Ring	1	
3	3900632	Screw, Hex Flange Head Cap	1	M8 X 1.25 X 35
4	3902112	Screw, Hex Flange Head Cap	2	M8 X 1.25 X 80
5	3903035	Screw, Banjo Connector	1	
6	3955080	Connection, Fuel Block	1	
7	3955171	Coupling, Plain Hose	1	
8	3957290	Valve, Check	1	
9	3963983	Washer, Sealing	4	
10	3963984	Washer, Sealing	1	
11	3964337	Connector, Qck Disconnect	1	
12	3974880	Tube, Fuel Drain	1	
13	4891385	Washer, Sealing	1	

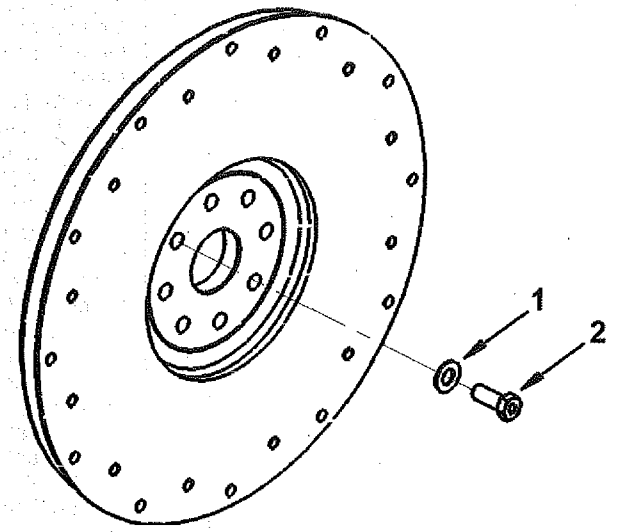

fw952zp

Ref No.	Part Number	Part Name	Req	Remarks
		FLYWHEEL MOUNTING		
		OPTION FW9704		Flywheel Mounting
				Bolt Length: 32 mm Flywheel Web Thickness: 16 mm To Suit REPTO: No
1	3900269	Washer, Plain	8	M12
2	3901395	Screw, Hexagon Head Cap	8	M12 X 1.25 X 32

NOTES

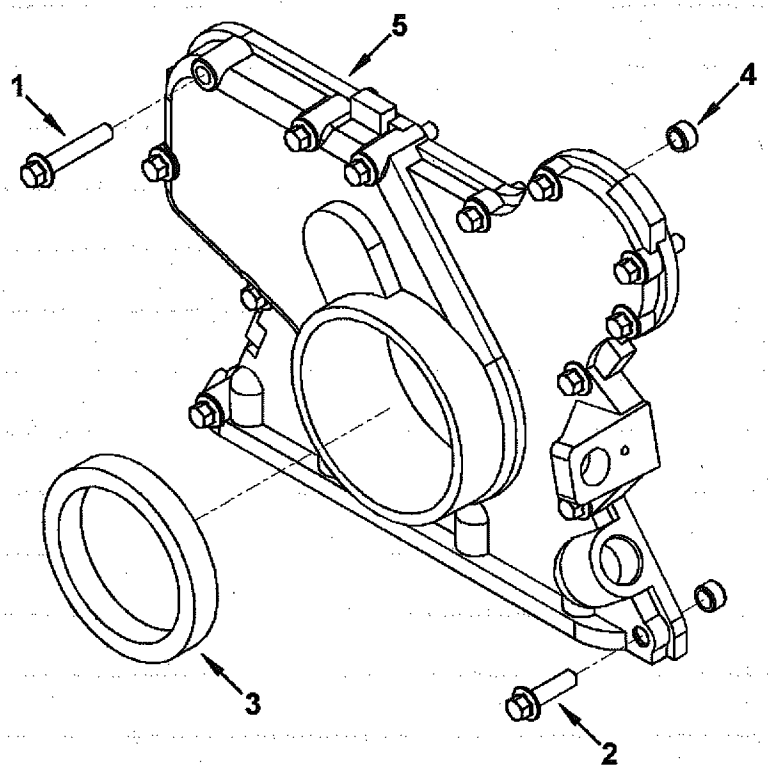

gg900zp

Ref No.	Part Number	Part Name	Req	Remarks
		FRONT GEAR COVER		
		OPTION GG9816		Front Gear Cover
				Belt Retainer Provided: No Noise Panel Provision: No PTO Location From Crank CL (mm): No PTO Studded Capscrew for Oil Fill: No Studded Capscrew for Oil Gauge: No Gear Housing Material: Cast Aluminum Structural Block: No Oil Fill Provision: No Oil Pan/Front Gear Cover Mounting Holes: 2
1	3901445	Screw, Hex Flange Head Cap	6	M8 X 1.25 X 45
2	3902114	Screw, Hex Flange Head Cap	7	M8 X 1.25 X 30
3	4890832	Seal, Oil	1	
4	3949326	Dowel, Ring	2	
5	3965349	Cover, Front	1	

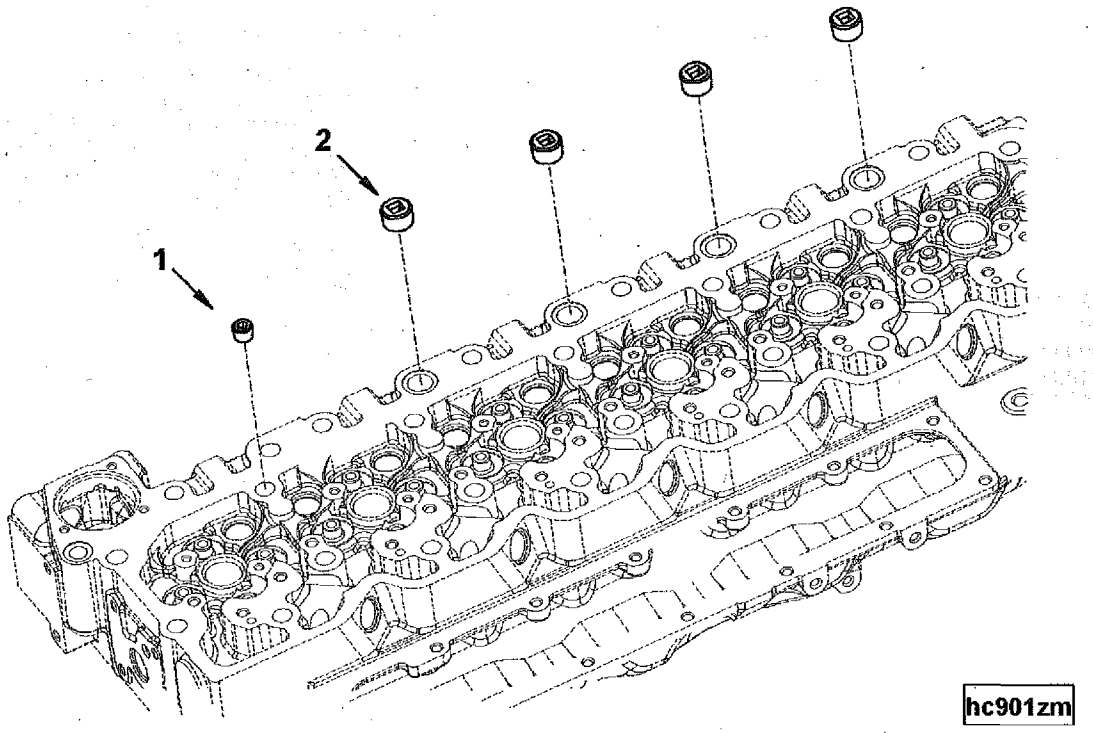

Ref No.	Part Number	Part Name	Req	Remarks
		CABIN HEATER PLUMBING		
		OPTION HC9026		Cabin Heater Plumbing
				For use With Customer Supplied Cabin Heater.
1	3008466	Plug, Pipe	1	1/4 NPT
2	3008468	Plug, Pipe	4	1/2 NPT

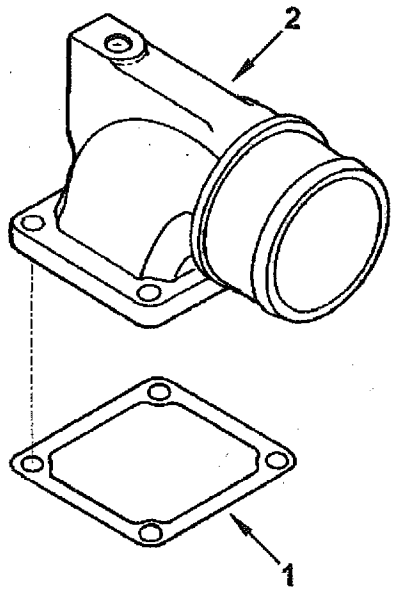

ic950ge

Ref No.	Part Number	Part Name	Req	Remarks
		AIR INTAKE CONNECTION		
		OPTION IC9368		Air Intake Connection Connection Orientation: Horizontal Outward Connection Inlet Outside Diameter (mm): 76.0 Connection Type: Beaded Bead/Flange Diameter (mm): 79 OEM Connection Location (mm): X From Engine CL: 320.5 Y From Crank CL: 536.7 Z From FFOB: -172.0 Intake Manifold Mounting Provision: 4 Holes in 75 X 80 mm Pattern
1	3949473	Gasket, Connection	1	
2	3921836	Connection, Air Intake	1	

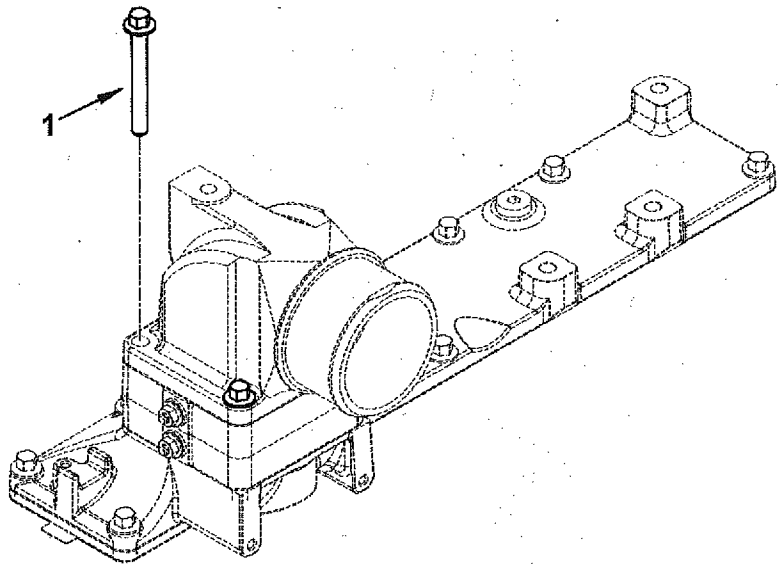

ic957gc

Ref No.	Part Number	Part Name	Req	Remarks
		INTAKE CONNECTION MOUNTING		
		OPTION IC9453		Intake Connection Mounting Intake Connection Flange Thickness (mm): 11 Air Heater Specified: Yes Air Heater/Spacer Thickness (mm): 41.1 Grounded via Conducting Gasket.
1	3926972	Screw, Hex Flange Head Cap	4	

NOTES

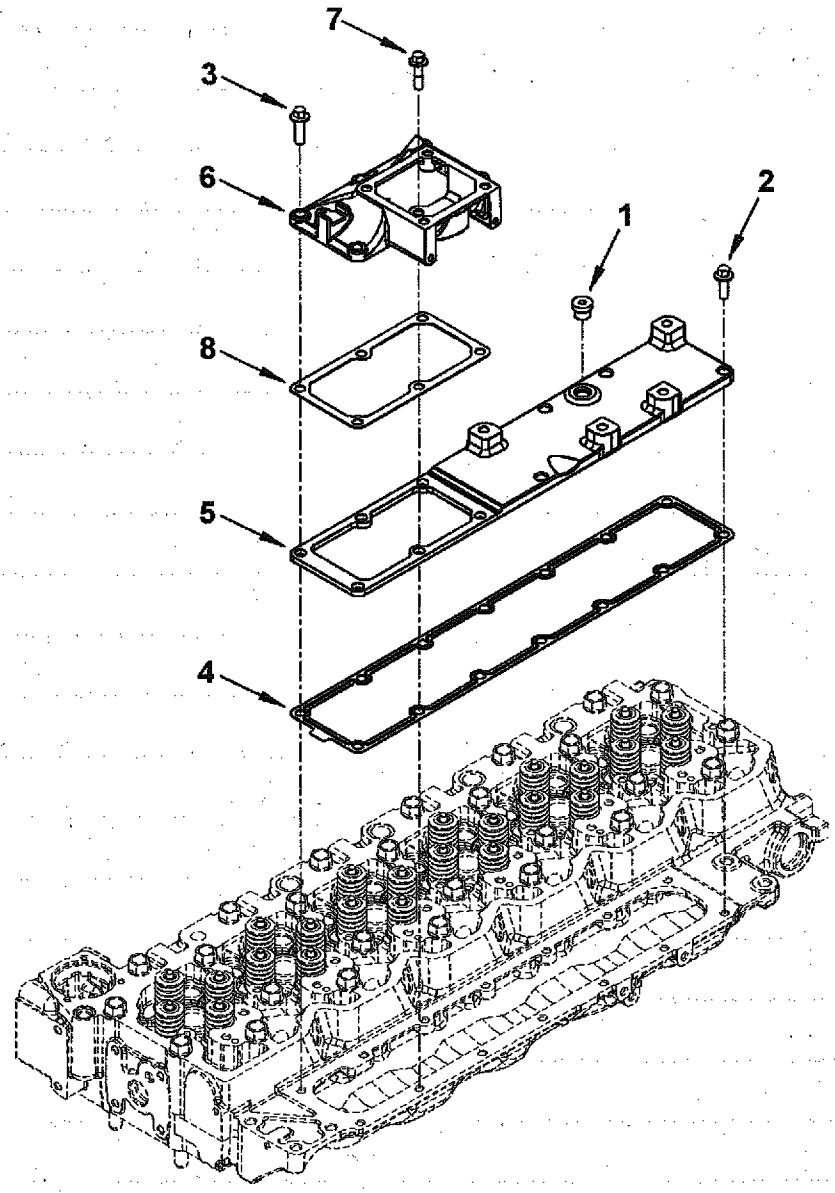

im901gm

Ref No.	Part Number	Part Name	Req	Remarks
		AIR INTAKE MANIFOLD		
		OPTION IM9061		Air Intake Manifold Manifold Mounting Hole Pattern: 14 Holes in 75 X 480 (mm) Pattern Integral Intake Connection: No Intake Connection Mounting Provision: 4 Holes in 75 X 80 (mm) Pattern Intake Connection Mounting Interface Location (mm): X From Engine CL: 210.5 Y From Crank CL: 436.6 Z From FFOB: -172 Air Heater Mounting Provision: 4 Holes in 75 X 80 (mm) Pattern Integral Air Heater: No Air Compressor Air Supply Port Size: 3/4 - 14 NPTF Air Compressor Air Supply Port Location (mm): X From Engine CL: 235.6 Y From Crank CL: 398.8 Z From FFOB: -172
1	3678921	Plug, Threaded	1	
2	3918109	Screw, Hex Flange Head Cap	4	M8 X 1.25 X 25
3	3938036	Screw, Hex Flange Head Cap	5	
4	3947530	Gasket, Int Manifold Cover	1	
5	3973157	Cover, Intake Manifold	1	
6	3975535	Connection, Adapter	1	
7	3976865	Screw, Hex Flange Head Cap	1	
8	3978072	Gasket, Connection	1	

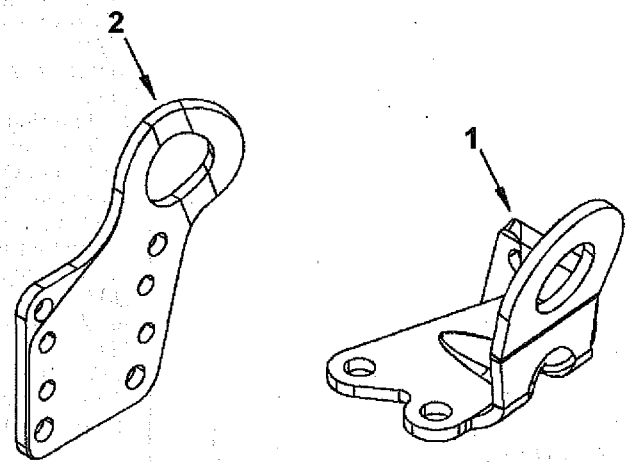

la951go

Ref No.	Part Number	Part Name	Req	Remarks
		LIFTING ARRANGEMENT		
		OPTION LA9106		Lifting Arrangement Bracket(s) Provided: Front and Rear Accomodates Pad Mount Alternator Bracket: Yes Accomodates Spool, Hinge and Customer Supplied Mount Alternator Bracket: Yes
1	3977282	Bracket, Lifting	1	
2	4894100	Bracket, Lifting	1	

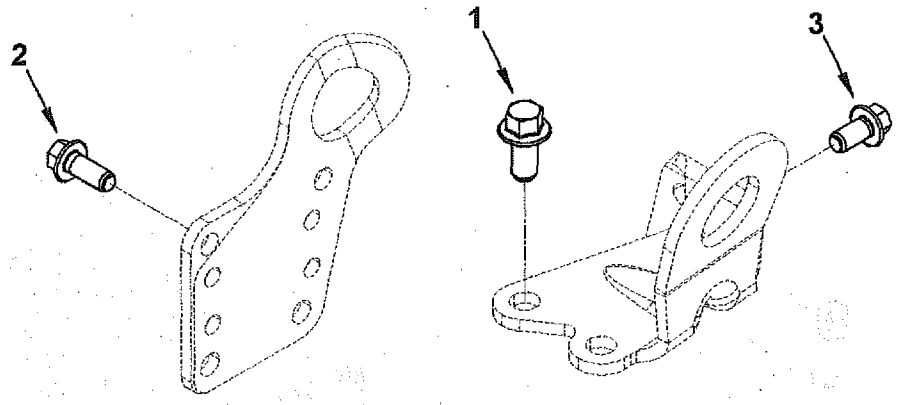

Ref No.	Part Number	Part Name	Req	Remarks
		LIFTING ARRANGEMENT		
		OPTION LA9108		Lifting Arrangement
1	3901249	Screw, Hex Flange Head Cap	2	M12 X 1.75 X 25
2	3902460	Screw, Hex Flange Head Cap	4	M10 X 1.50 X 25
3	3903990	Screw, Hex Flange Head Cap	2	M10 X 1.50 X 20

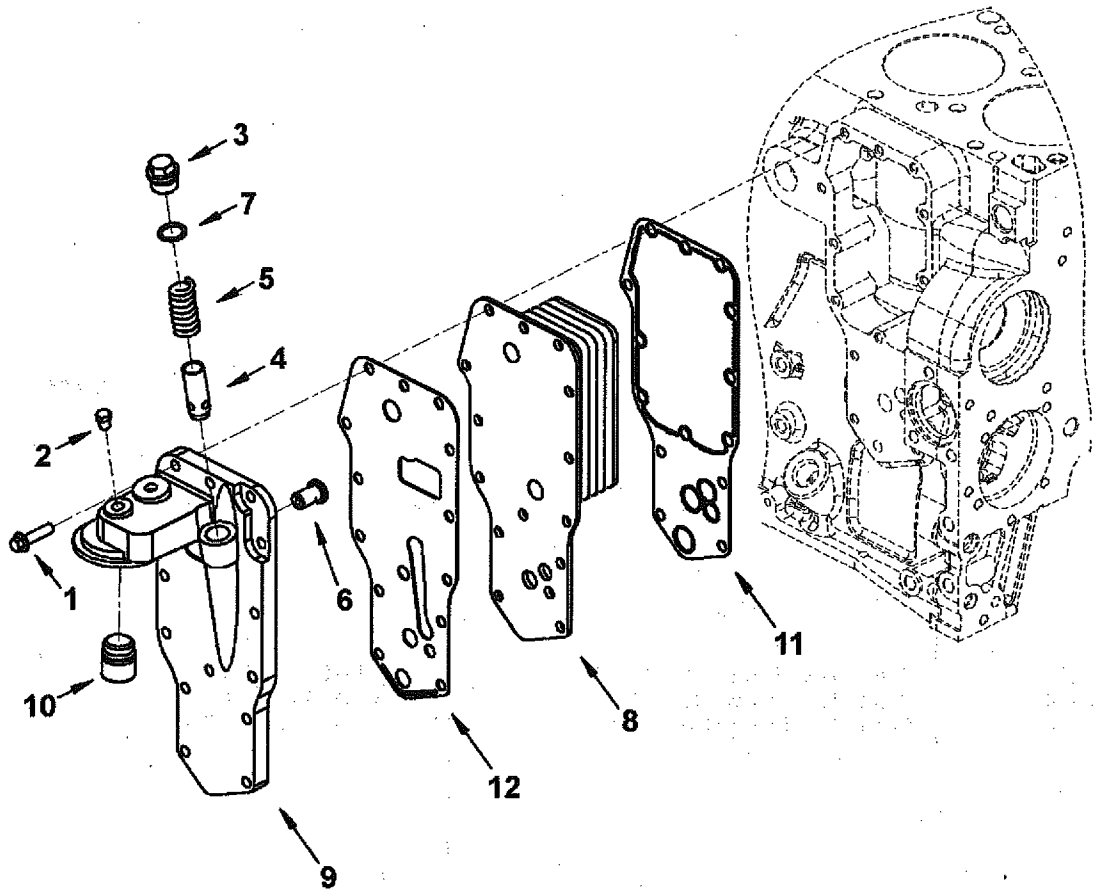

lc900zb

Ref No.	Part Number	Part Name	Req	Remarks
		ENGINE OIL COOLER		
		OPTION LC9244		Engine Oil Cooler Advertised HP Restriction: Less Than or Equal to 300 HP Filter Head Location: High CL of Engine to CL of Filter Head (mm): -227.8 FFOB to CL of Filter Head (mm): -185.0 Filter Thread Size Provided: 1-16 UN - 2A Oil Pressure Tap Size: 1/8 - 27 NPTF Lube Flow Cooling Capacity (gpm): 20.5 Block Mounting Interface: 15 X M8 X 1.25 Threaded Hole
1	3901445	Screw, Hex Flange Head Cap	15	M8 X 1.25 X 45
2	3906619	Plug, Pipe	2	1/8 NPT
3	3946947	Plug, Threaded	1	
4	3947287	Plunger, Prs Regulator	1	
5	3925009	Spring, Compression	1	
6	3936365	Valve, Pressure Relief	1	
7	3929457	Seal, O Ring	1	
8	3975818	Cooler, Oil	1	
	3955034	Head, Lub Oil Filter	1	
9	3965153	Head, Lub Oil Filter	1	
10	3942367	Adapter, Filter Head	1	
	3977913	Set, Oil Cooler Gasket	1	
11	(2830559)	Gasket, Oil Cooler Core	1	Serviced as 3977913
12	(3974127)	Gasket, Filter Head	1	Serviced as 3977913

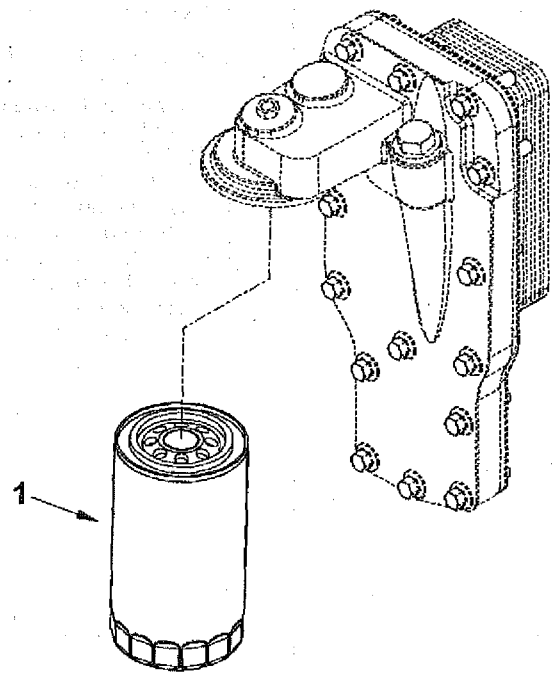

lf900zj

Ref No.	Part Number	Part Name	Req	Remarks
		LUBE OIL FILTER		
		OPTION LF9138		Lube Oil Filter
1	(3937736)	Cartridge, Lub Oil Filter	1	Filter Type: Full Flow Mounting Location: On Engine Mounted Orientation: Vertical CL of Engine to CL of Filter (mm): -227.8 FFOB to CL of Filter (mm): -185.0 Filter Length (mm): 175.3 Filter Diameter (mm): 93.5 Filter Thread Size: 1 1/8-16 UN Removal Distance (mm): 23.1 Filter Media: Stratapore Oil Pan Sump Capacity Restricition: No Restrictions Lube Flow Filtering Capability (GPM): 22.0 Purchase From Fleetguard

NOTES

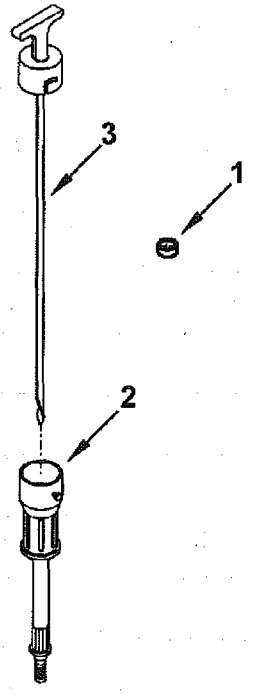

lg955gp

Ref No.	Part Number	Part Name	Req	Remarks
		OIL LEVEL GAUGE		
		OPTION LG90115		Oil Level Gauge Oil Pan Sump Type: Standard Front/ Rear Dipstick Supplier: Cummins Dipstick Tube Supplier: Cummins Dipstick Location: Fuel Pump Side Tube Entry Location FFOB (mm): 352 Dipstick Style: Locking, Free Hanging Oil Level High / Low (qt): 18.5 / 15.85 Dipstick Calibration: BFOB - Full / Low (mm): 50.5/63.6 Power Angle (Deg): 0 Tilt Angle (Deg): 0 Effective Tube Length (mm): 153 Handle Color: Yellow Wire tie to Engine for Shipment.
1	3900955	Plug, Expansion	4	
	3976993	Dipstick	1	
2	3963443	Tube, Oil Gauge	1	
3	3976994	Dipstick	1	

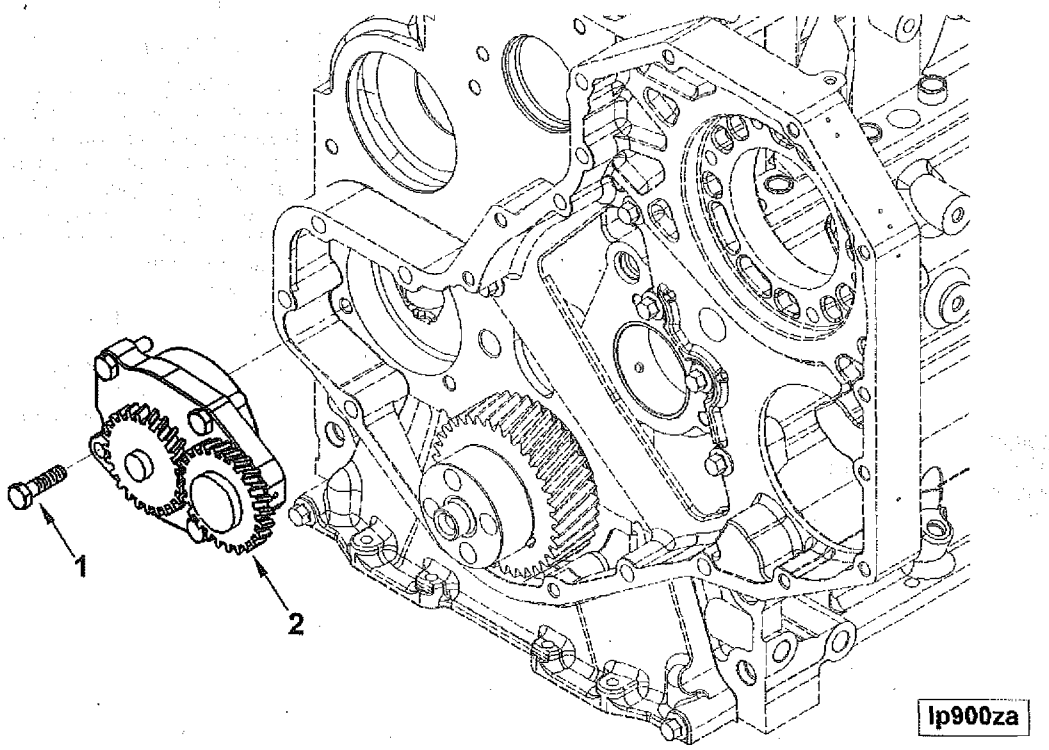

Ref No.	Part Number	Part Name	Req	Remarks
		LUBRICATION OIL PUMP		
		OPTION LP9057		Lubrication Oil Pump Pump Drive: Non Crank Concentric Body Material: Cast Iron Flow Rate @ Pump Speed (GPM @ RPM): 93.5 @ 4200 Gear Type: Sintered HCR Gear Piston Cooling Method: Saddle or J-Jet Engine Aspiration: Charge Air Cooled Block Oil Pump Cavity (mm): 21.1 Body Diameter: 84025 mm
1	3900677	Screw, Hexagon Head Cap	4	M8 X 1.25 X 30
2	3971544	Pump, Lubricating Oil	1	

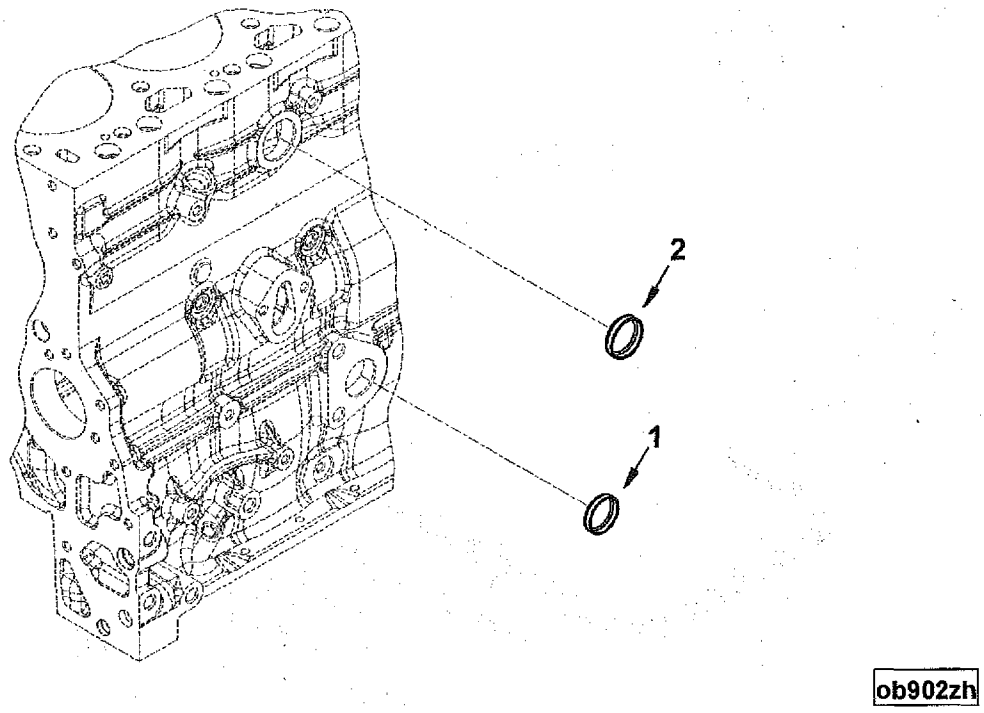

Ref No.	Part Number	Part Name	Req	Remarks
		OIL FILLER ARRANGEMENT		
		OPTION OB9343		Oil Fill Arrangement Fill Tube Supplier: No Fill Provided in Block Functional With Dual Power Ratings: Yes Restricted Breather Type: None Drain Provision For 50 DN Alternator: No Engine Aspiration: Charge Air Cooled Fill Location: Valve Cover
1	3900958	Plug, Expansion	1	
2	3905401	Plug, Expansion	1	

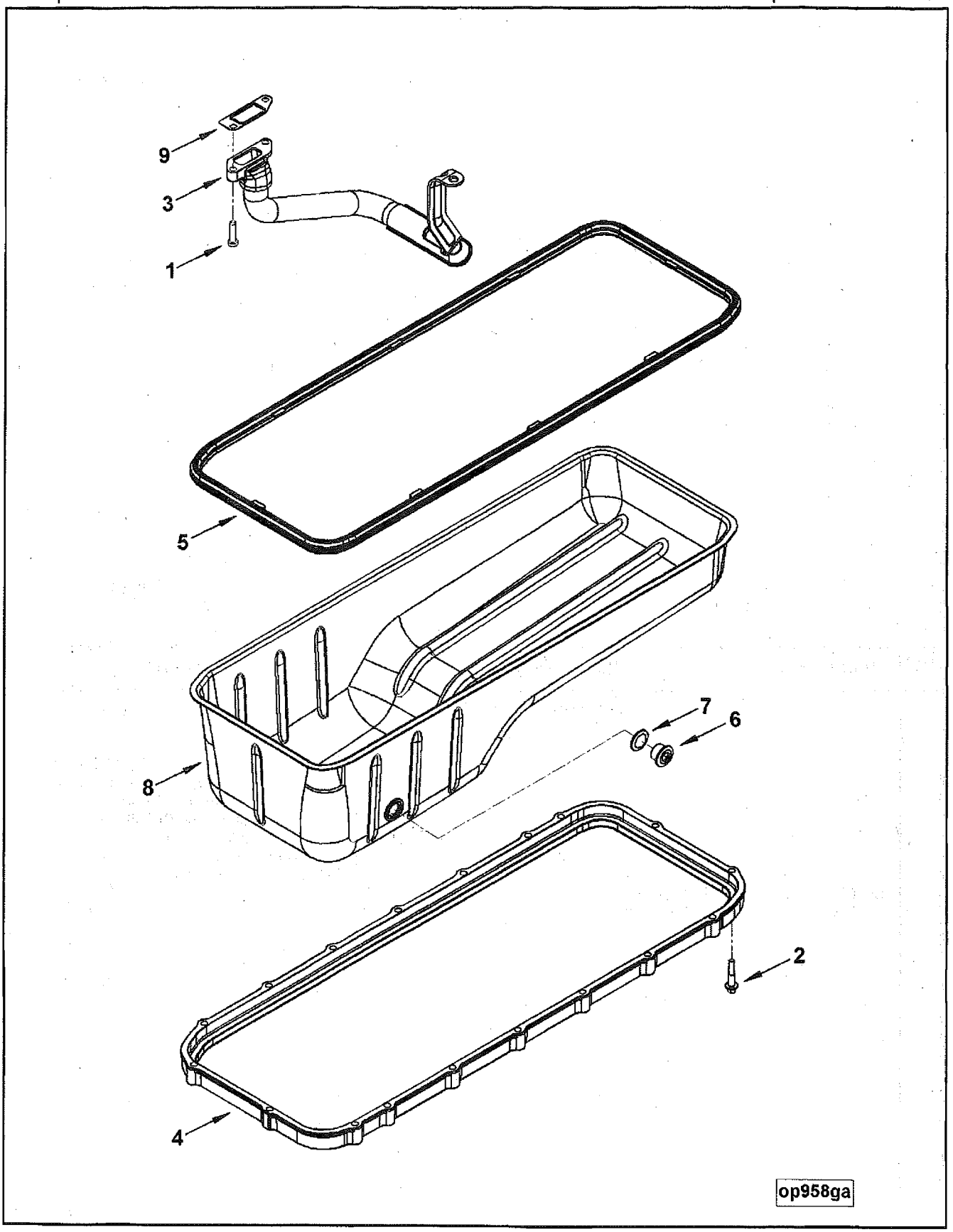
9
3
1
5
7
6
8
2
4
op958ga

Ref No.	Part Number	Part Name	Req	Remarks
		OIL PAN		
		OPTION OP9456		Oil Pan
				Sump Location: Front Oil Pan Material: Stamped Steel Pan Capacity Value Hi(qt): 18.5 (17.5 l) Low (qt): 15.85 (15 l) Oil Pan Angularity Value: Up: 50 Down: 50 Side to Side: 43 Drain Size: M22
1	3025806	Screw, Socket Head Cap	2	M8 X 1.25 X 30
2	3900678	Screw, Hex Flange Head Cap	18	M8 X 1.25 X 40
3	3977790	Tube, Lub Oil Suction	1	
4	4897858	Adapter, Oil Pan	1	
5	4897861	Gasket, Oil Pan	1	
	4898036	Pan, Oil	1	
6	3282266	Plug, Threaded	2	
7	3287561	Washer, Sealing	2	
8	(4898037)	Pan, Oil	1	
9	4898301	Gasket, Oil Suc Connection	1	

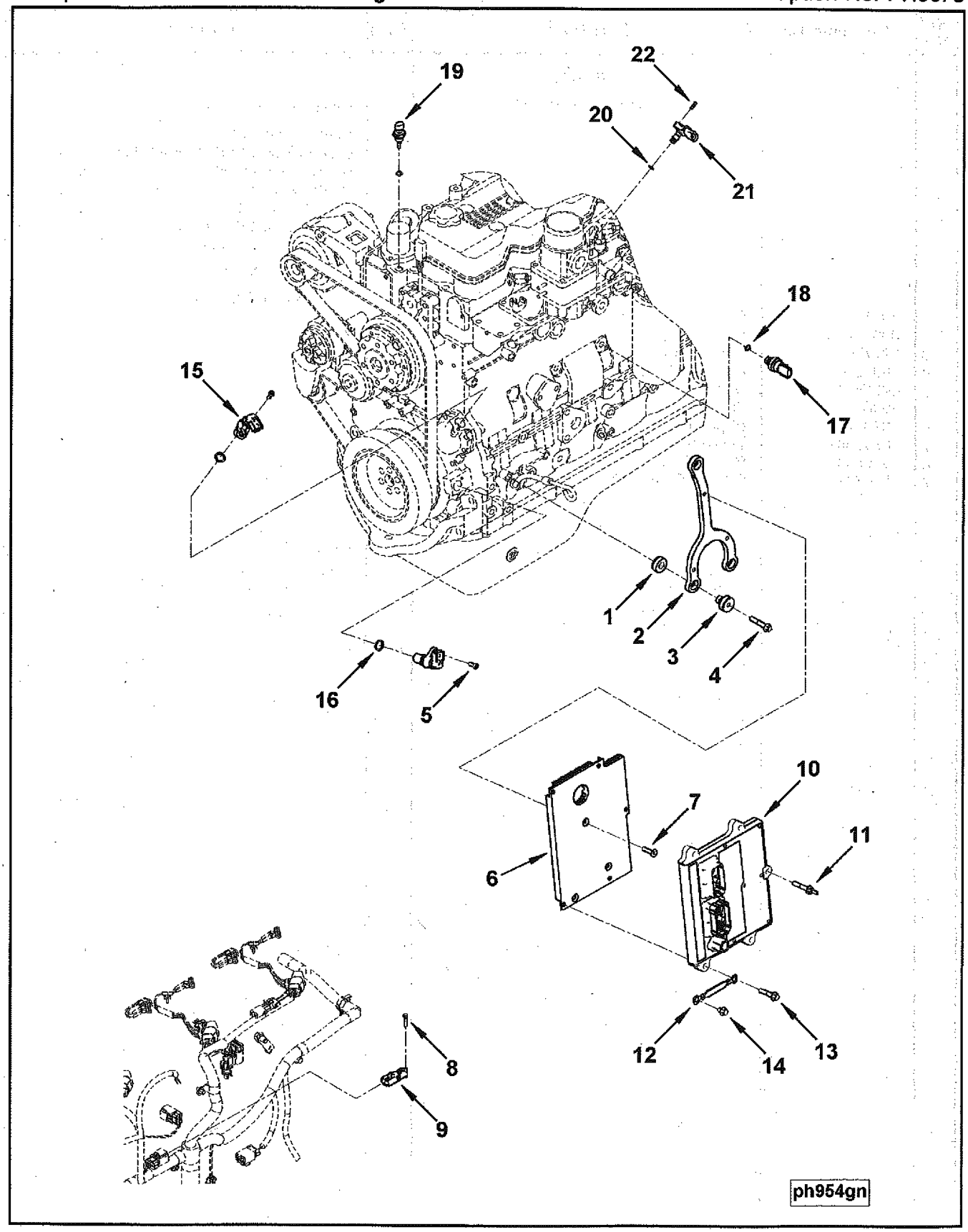
19
22
20
21
18
15
17
1
2
3
4
16
5
10
7
11
6
12
14
13
8
9
ph954gn

Ref No.	Part Number	Part Name	Req	Remarks
		ENGINE CONTROL MODULE		
		OPTION PH9075		Engine Control Module Engine Control System: E2I ECM Version: CM850 Production Ambient Air Pressure Sensor Included: Yes Intake Manifold Temperature Sensor Manufacturer: Hi Stat Oil Pressure Sensor: Switch Speed Sensor Location: Damper Pulley CDC may Substitute P/N 3958748 for P/N 3609967. DEP may Substitute P/N 4897985 for 3609867.
1	3955219	Isolator, Vibration	3	
2	3977324	Bracket, Etr Cnt Module	1	
3	3955220	Isolator, Vibration	3	
4	3901445	Screw, Hex Flange Head Cap	2	M8 X 1.25 X 45
5	3906391	Screw, Socket Head Cap	3	M6 X 1.00 X 16
6	3977325	Support, Etr Cnt Module	1	
7	3284216	Screw, Flat Head Cap	3	
8	3920854	Screw, Captive Washer Cap	2	M5 X 0.80 X 20
9	4076493	Sensor, Pressure	1	
10	(3965159)	Module, Electronic Control	1	Recon Equivalent 3965159 RX
11	3947206	Screw, Hex Flange Head Cap	1	
12	3977357	Wire, Ground	1	
13	3900678	Screw, Hex Flange Head Cap	2	M8 X 1.25 X 40
14	3093956	Screw, Hex Flange Head Cap	1	M8 X 1.25 X 12
	3408529	Sensor, Position	2	
15	(3408530)	Sensor, Position	1	
16	4010643	Seal, O Ring	1	
	4076930	Switch, Pressure	1	
17	(4076931)	Switch, Pressure	1	
18	4010519	Seal, O Ring	1	
	4088750	Sensor, Temperature	1	
18	4010519	Seal, O Ring	1	
19	(4088751)	Sensor, Temperature	1	
	4903286	Sensor, Prs Temperature	1	
20	4903482	Seal, O Ring	1	
21	(4903285)	Sensor, Prs Temperature	1	
22	3957849	Screw, Socket Head Cap	3	

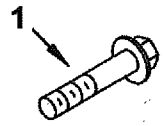

ph950ge

Ref No.	Part Number	Part Name	Req	Remarks
		ENGINE CONTROL MODULE		
		OPTION PH9094		Engine Control Module
				Fuel Pump Model: Bosch Common Rail ECM Type: Motorola ECM Location: On Engine
1	3901445	Screw, Hex Flange Head Cap	3	M8 X 1.25 X 45

NOTES

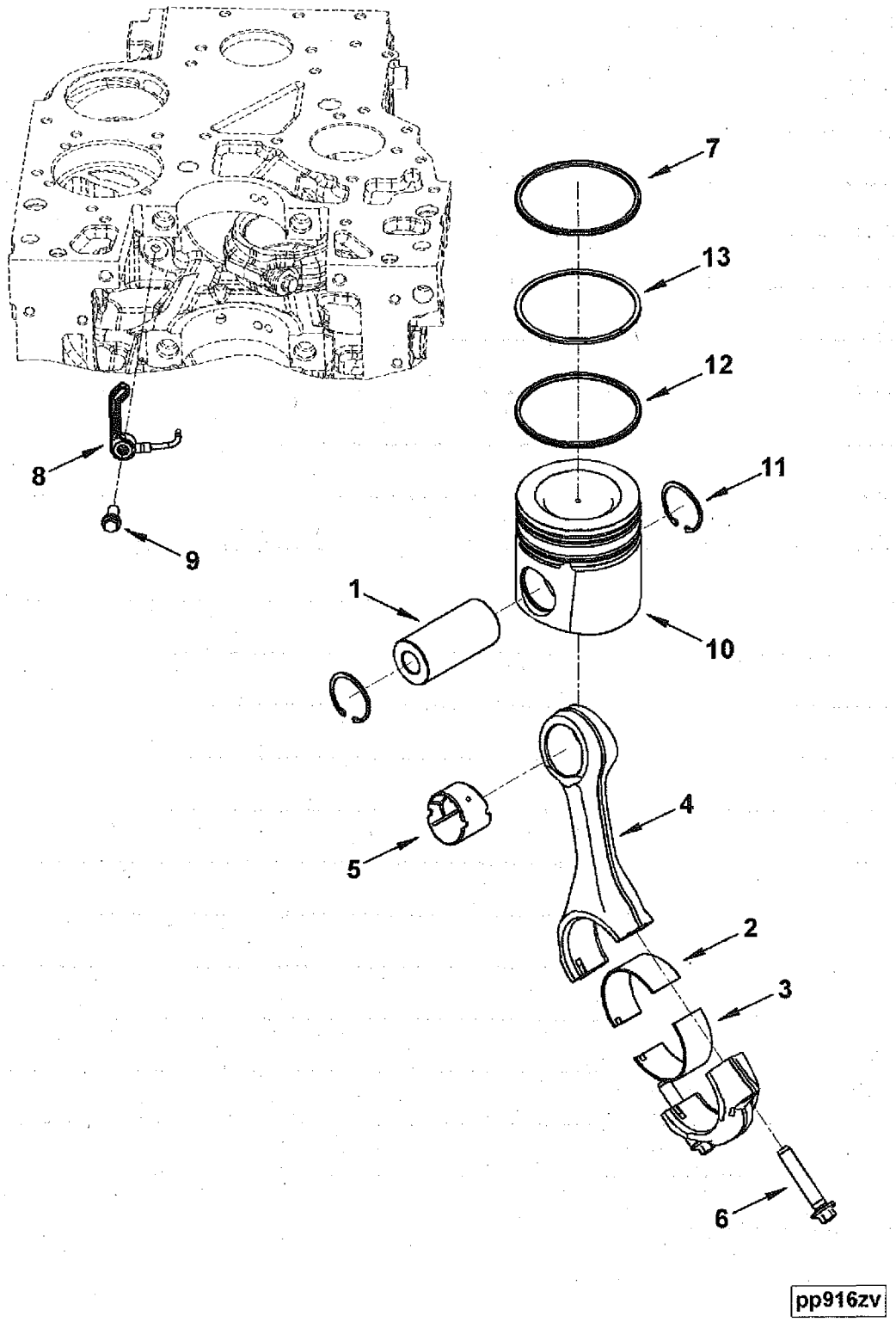
7
13
12
11
8
9
1
10
4
5
2
3
6
pp916zv

Ref No.	Part Number	Part Name	Req	Remarks
		CONNECTING ROD AND PISTON		
		OPTION PP8611		Connecting Rod and Piston
1	(3967048)	Pin, Piston	6	
2	3969562	Bearing, Connecting Rod	6	Upper
3	4893693	Bearing, Connecting Rod	6	Lower
	3971212	Rod, Engine Connecting	6	Recon Equivalent 3971212 RX
4	(3971211)	Rod, Engine Connecting	1	
5	4891178	Bushing	1	
6	4891179	Screw, Connecting Rod Cap	2	
7	3971297	Ring, Compression Piston	6	
8	3968877	Nozzle, Piston Cooling	6	
9	3964817	Screw, Banjo Connector	6	
10	3975868	Piston, Engine	6	Standard
11	3920691	Ring, Retaining	12	
12	3970519	Ring, Oil Piston	6	
13	3976339	Ring, Compression Piston	6	
2	3901171	Bearing, Connecting Rod	A/R	0.25 mm Oversize
2	3901172	Bearing, Connecting Rod	A/R	0.50 mm Oversize
2	3901173	Bearing, Connecting Rod	A/R	0.75 mm Oversize
2	3901174	Bearing, Connecting Rod	A/R	1.00 mm Oversize
3	4892795	Bearing, Connecting Rod	A/R	0.25 mm Oversize
3	4892796	Bearing, Connecting Rod	A/R	0.50 mm Oversize
3	4892797	Bearing, Connecting Rod	A/R	0.75 mm Oversize
3	4892798	Bearing, Connecting Rod	A/R	1.00 mm Oversize

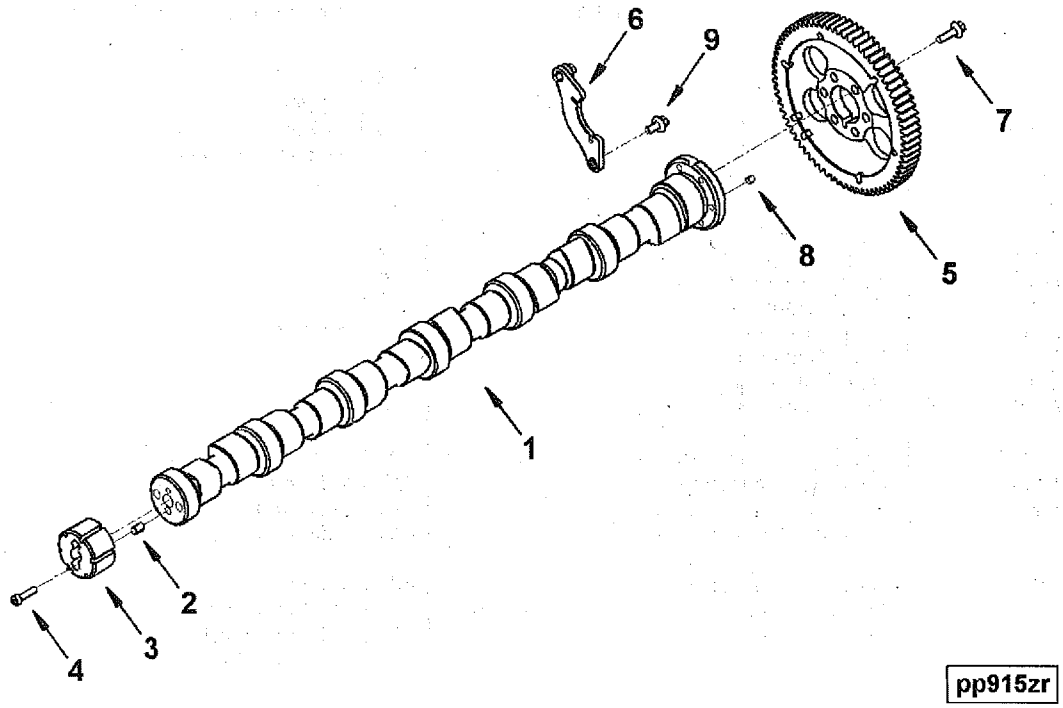

Ref No.	Part Number	Part Name	Req	Remarks
		CAMSHAFT		
		OPTION PP8611		Camshaft
	3954100	Camshaft	1	
1	3954099	Camshaft	1	
2	3954111	Dowel, Ring	1	
3	3955069	Ring, Speed Indicator	1	
4	4895877	Screw, Socket Head Cap	2	
5	4896380	Gear, Camshaft	1	
6	4897457	Support, Camshaft Thrust	1	
7	3093730	Screw, Hex Flange Head Cap	6	
8	3904483	Dowel, Pin	1	
9	3925883	Screw, Hex Flange Head Cap	2	M8 X 1.25 X 16

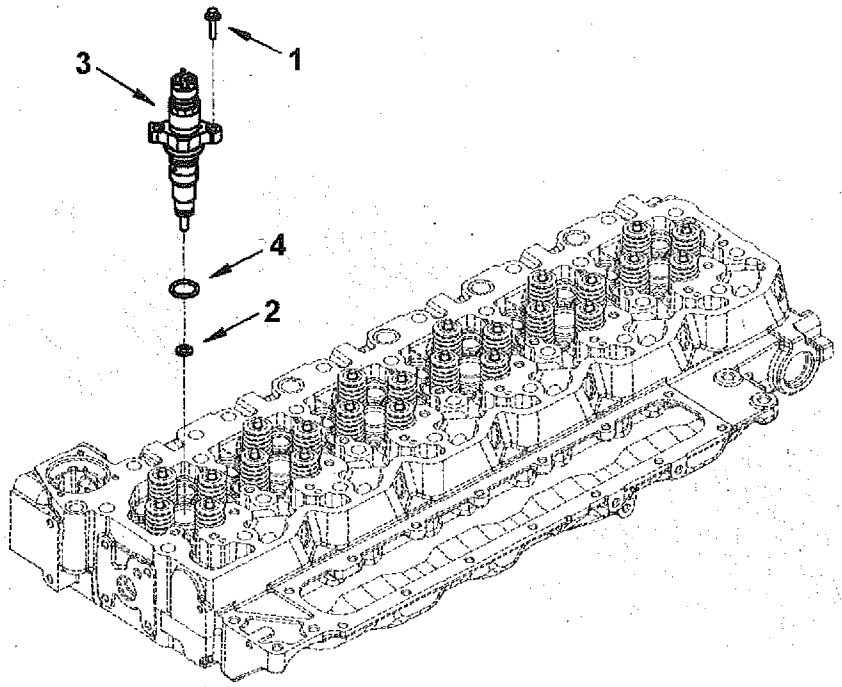

pp913zf

Ref No.	Part Number	Part Name	Req	Remarks
		INJECTOR		
		OPTION PP8611		Injector
1	3900628	Screw, Hex Flange Head Cap	12	M6 X 1.00 X 30
	3968927	Injector	6	
2	3937142	Seal, Injector	1	
3	3968926	Injector	1	
4	4890926	Seal, O Ring	1	

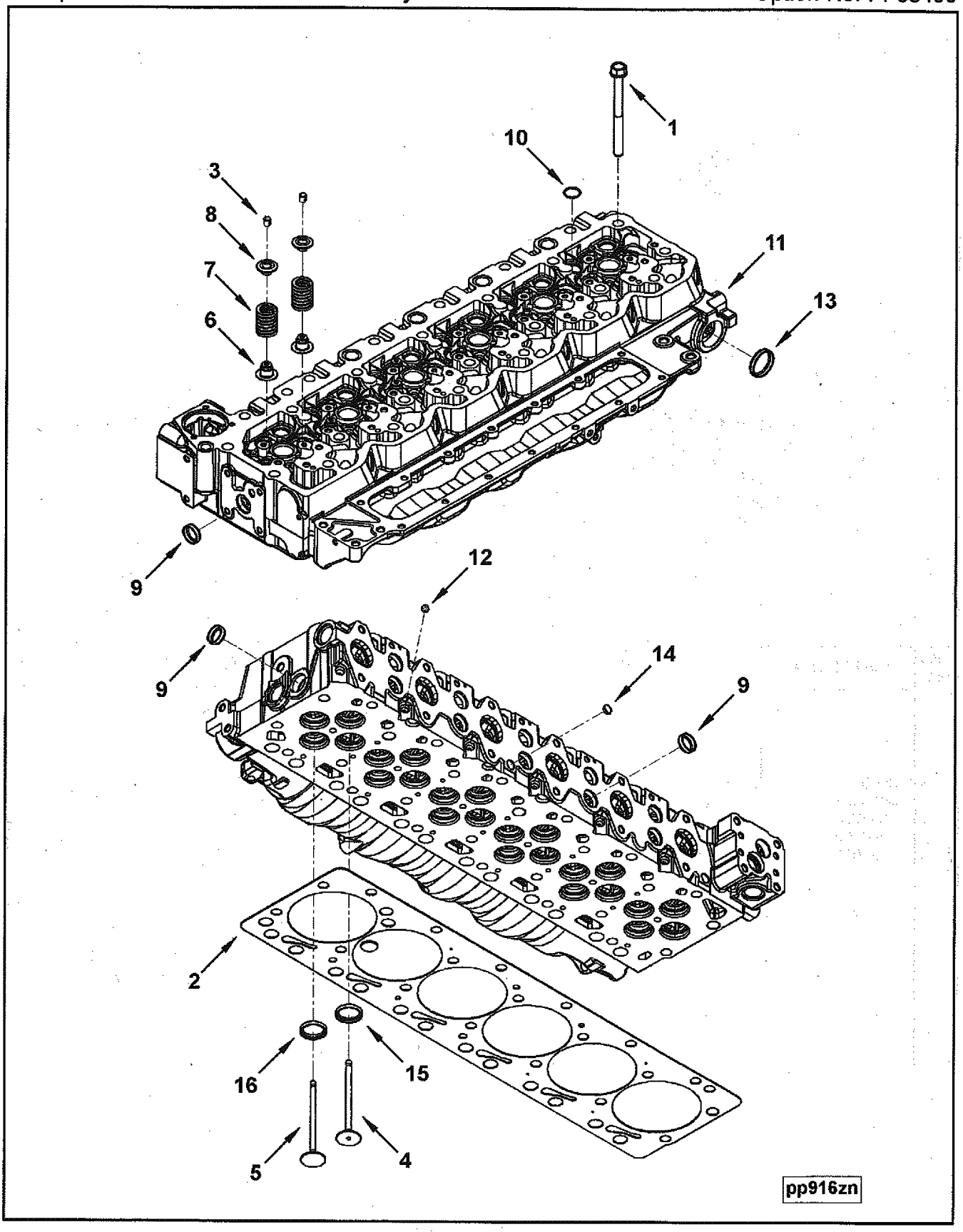
1
10
3
8
7
6
11
13
9
12
9
14
9
2
16
15
5
4
pp916zn

Ref No.	Part Number	Part Name	Req	Remarks
		CYLINDER HEAD		
		OPTION PP98490		Cylinder Head
1	3927063	Screw, Hex Flange Head Cap	26	
2	3978381	Gasket, Cylinder Head	1	
	3971793	Head, Cylinder	1	
	3802924	Kit, Intake Valve	12	
3	3940123	Collet, Valve	2	
4	(3940735)	Valve, Intake	1	Serviced as 3802924
	3802967	Kit, Exhaust Valve	12	
3	3940123	Collet, Valve	2	
5	(3940734)	Valve, Exhaust	1	
6	3955393	Seal, Valve Stem	24	
7	3943161	Spring, Valve	24	
8	3943198	Retainer, Valve Spring	24	
	(3971792)	Head, Cylinder	1	
9	(3914035)	Plug, Expansion	13	
10	3920706	Plug, Expansion	11	
11	(3971767)	Head, Cylinder	1	
12	3007632	Plug, Expansion	7	
13	3945094	Plug, Expansion	2	
14	3945095	Plug, Expansion	2	
15	3943449	Insert, Valve	12	
16	3943450	Insert, Valve	12	

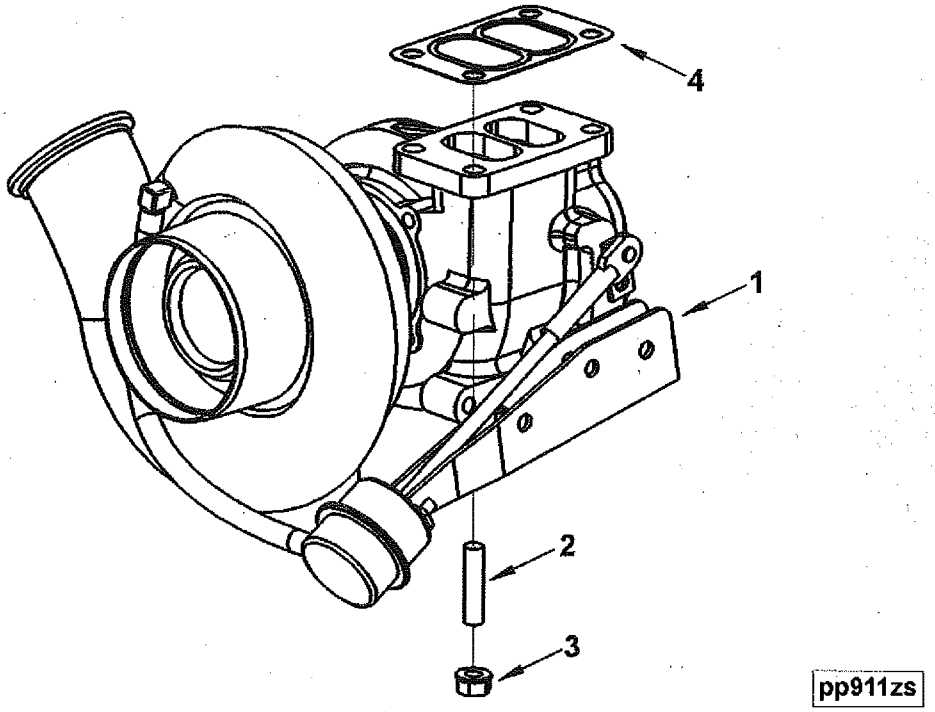

Ref No.	Part Number	Part Name	Req	Remarks
		TURBOCHARGER		
		OPTION PP98665		Turbocharger
1	(4036534)	Turbocharger	1	
2	3818823	Stud	4	
3	3818824	Nut, Hexagon Flange	4	M10 X 1.50
4	3949530	Gasket, Turbocharger	1	

NOTES

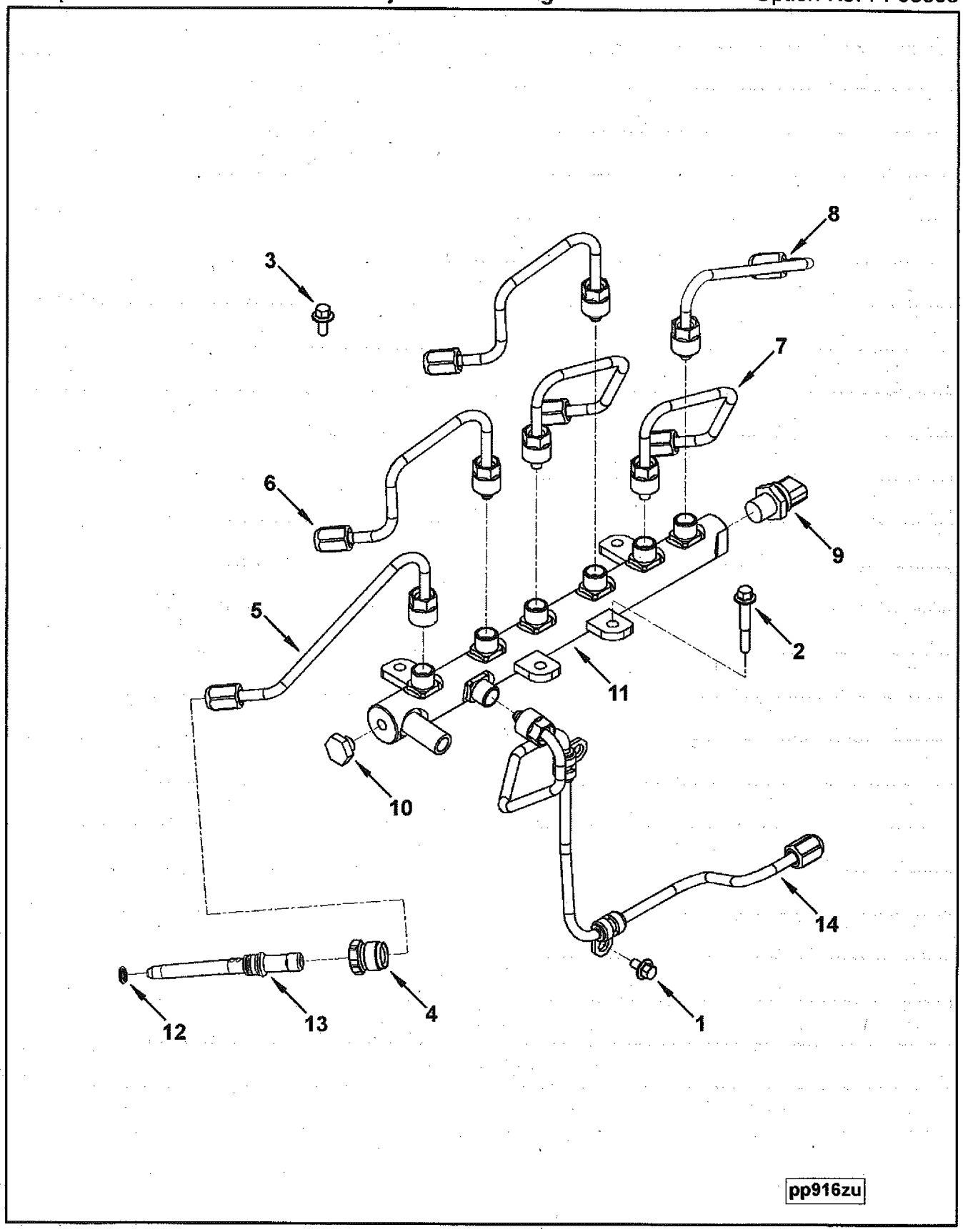
8
3
7
6
9
5
2
11
10
14
12
13
4
1
pp916zu

Ref No.	Part Number	Part Name	Req	Remarks
		INJECTOR PLUMBING		
		OPTION PP98668		Injector Plumbing
				Fuel Manifold Manufacturer/Model: Bosch Common Rail Pressure Capability: 1600 BAR Fuel Pump Supply: M14 X 1.5 Location From FFOB and CL of Crank (mm): X = 205 Y = 0 Z = -621 Fuel Manifold CL: Parallel to Crank Fuel Manifold Drain Back Valve: SAE J2044 Works With low Fuel Pump Location.
1	3093956	Screw, Hex Flange Head Cap	2	M8 X 1.25 X 12
2	3900633	Screw, Hex Flange Head Cap	4	M8 X 1.25 X 50
3	3925883	Screw, Hex Flange Head Cap	1	M8 X 1.25 X 16
4	3946625	Retainer, Inj Ful Sup Cnr	6	
5	3973401	Tube, Injector Fuel Supply	1	
6	3973402	Tube, Injector Fuel Supply	2	
7	3973404	Tube, Injector Fuel Supply	2	
8	3973406	Tube, Injector Fuel Supply	1	
	(3974091)	Manifold, Fuel	1	
9	3974092	Sensor, Pressure	1	
10	3974093	Valve, Pressure Relief	1	
11	(3973938)	Manifold, Fuel	1	
	3975703	Connector, Inj Fuel Supply	6	
12	3947540	Seal, O Ring	1	
13	(3975702)	Connector, Inj Fuel Supply	1	
14	3971559	Tube, Fuel Transfer	1	

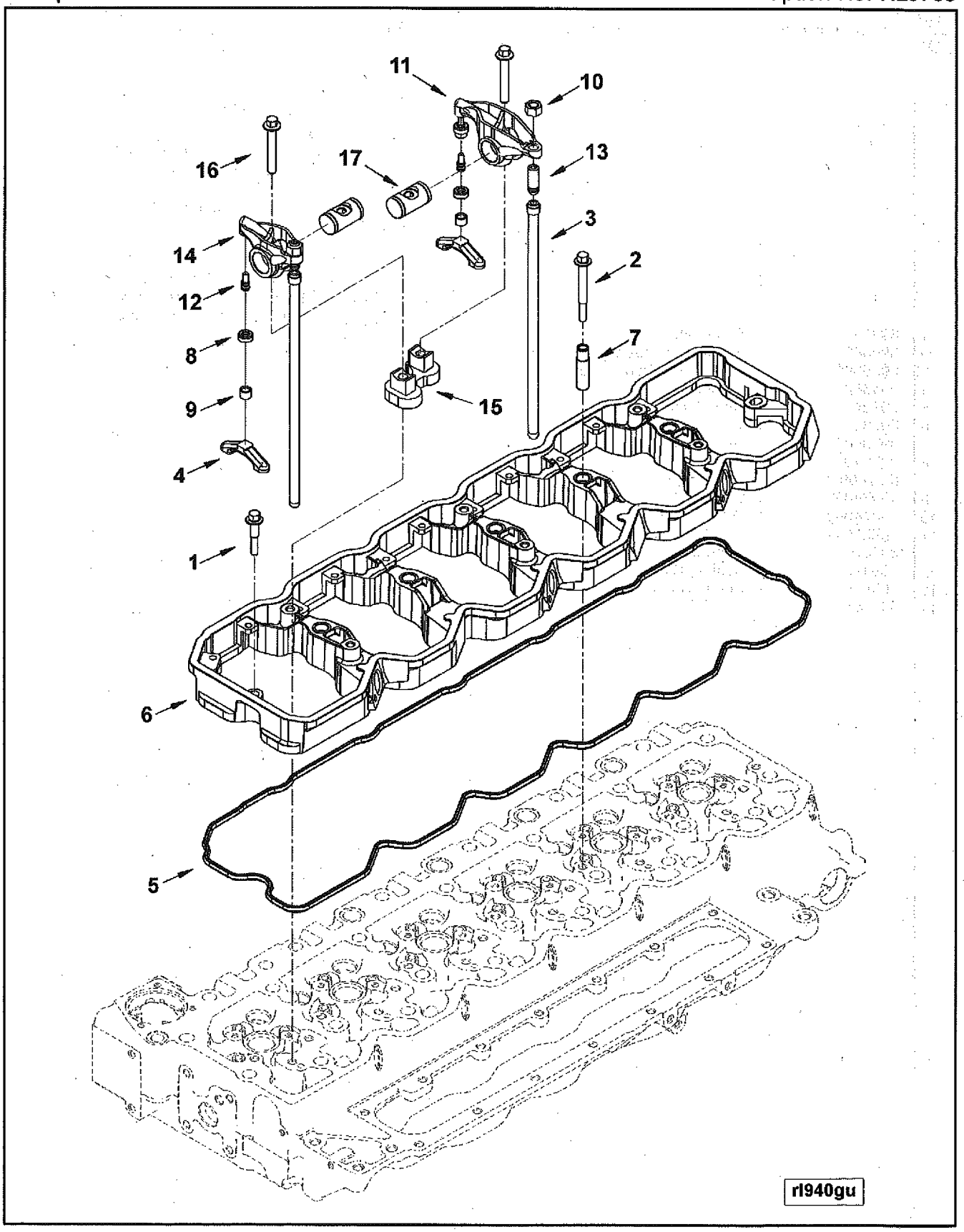
11
10
16
17
13
3
14
2
12
7
8
15
9
4
1
6
5
rl940gu

Ref No.	Part Number	Part Name	Req	Remarks
		ROCKER LEVER		
		OPTION RL9765		Rocker Lever
				Compression Brake Compatible: No Pressure Diameter Cast Rocker Housing With Additional Mounting Holes.
1	3900633	Screw, Hex Flange Head Cap	2	M8 X 1.25 X 50
2	3903096	Screw, Hex Flange Head Cap	5	M8 X 1.25 X 70
3	3941253	Rod, Push	12	
4	3943626	Crosshead, Valve	12	
5	4899231	Gasket, Rkr Lever Housing	1	
	4899257	Housing, Rocker Lever	1	
6	(4899235)	Housing, Rocker Lever	1	
7	(4899245)	Sleeve	5	
	3937219	Lever, Rocker	6	
8	(3935945)	Retainer, Socket	1	
9	(3935946)	Socket, Rocker Lever	1	
	(3942735)	Lever, Rocker	1	
10	203131	Nut, Heavy Hexagon	1	3/8 - 24 UNF
11	(3941928)	Lever, Rocker	1	
12	(3942730)	Ball, Rocker Lever	1	
13	3959128	Screw, Rkr Lever Adjusting	1	
	3937220	Lever, Rocker	6	
8	(3935945)	Retainer, Socket	1	
9	(3935946)	Socket, Rocker Lever	1	
	(3942734)	Lever, Rocker	1	
10	203131	Nut, Heavy Hexagon	1	3/8 - 24 UNF
12	(3942730)	Ball, Rocker Lever	1	
13	3959128	Screw, Rkr Lever Adjusting	1	
14	(3941927)	Lever, Rocker	1	
15	3964908	Support, Rocker Lever	6	
16	3990127	Screw, Hex Flange Head Cap	12	
17	3935892	Shaft, Rocker Lever	12	

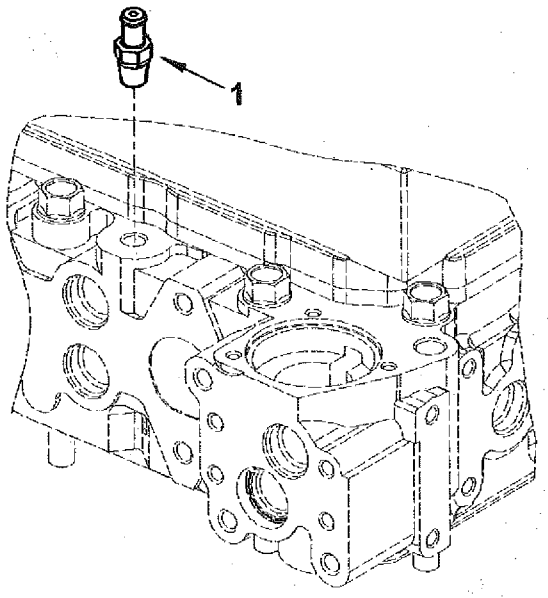

rp900zm

Ref No.	Part Number	Part Name	Req	Remarks
		ENGINE COOLANT VENT		
		OPTION RP9046		Engine Coolant Vent Vent Provision Type: Beaded Hose Engine Interface: 1/4" NPTF OEM Interface Connection Diameter (mm): 3.18 OEM Interface Connection Diameter (mm): 9.52 OEM Interface Connection Clamping Surface (mm): 15.75 CL of Engine to OEM Interface (mm): -76 CL of Crank to OEM Interface (mm): 429 FFOB to OEM Interface (mm): -156.5 For use With a Positive Deaeration Cooling System.
1	3943670	Fitting, Orifice	1	

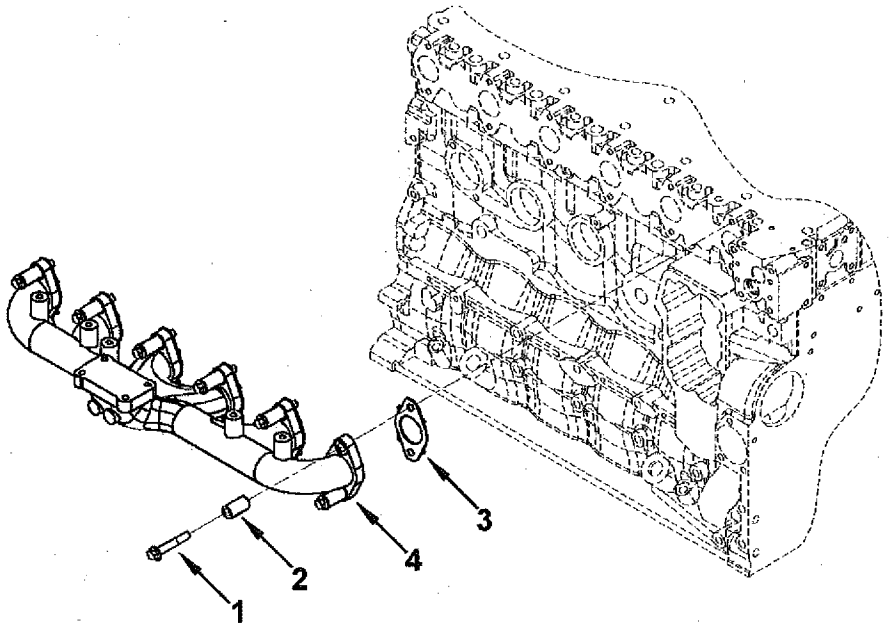

tb970gt

Ref No.	Part Number	Part Name	Req	Remarks
		TURBOCHARGER ARRANGEMENT		
		OPTION TB91059		Turbocharger Arrangement Exhaust Outlet Location: HMRO From Engine CL (mm): -177 From Crank CL (mm): 538 From FFOB (mm): -504 Aspiration: Charge Air Cooled Turbocharger Type: Wastegate Compressor Outlet Configuration: Half Marmon Compressor Outlet Angle on Engine (Deg): 180 Exhaust Outlet Configuraton: Half Marmon Exhaust Manifold Studs: None Block Drain Boss: Front
1	3944593	Screw, Hex Flange Head Cap	12	
2	3945252	Spacer, Mounting	12	
3	3955339	Gasket, Exhaust Manifold	6	
4	3973422	Manifold, Exhaust	1	

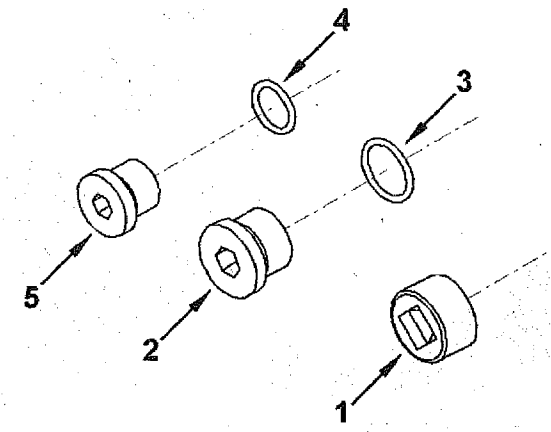

tk900zo

Ref No.	Part Number	Part Name	Req	Remarks
		TORQUE CONVERTER OIL COOLE		
		OPTION TK9019		Torque Converter Oil Cooler
				For use When no Torque Converter is Required. Contains Plugs to Plug the Port in the Block and Head. M18 Plug in Block Location 5026.
1	3008469	Plug, Pipe	1	3/4 NPT
	3089238	Plug, Threaded	1	M22 X 1.50 X 15.5
2	(3089239)	Plug, Threaded	1	M22 X 1.50
3	3089240	Seal, O Ring	1	M22 X 1.50 X 15.5
	3678873	Plug, Threaded	1	
4	3678786	Seal, O Ring	1	
5	3678791	Plug, Threaded	1	

NOTES

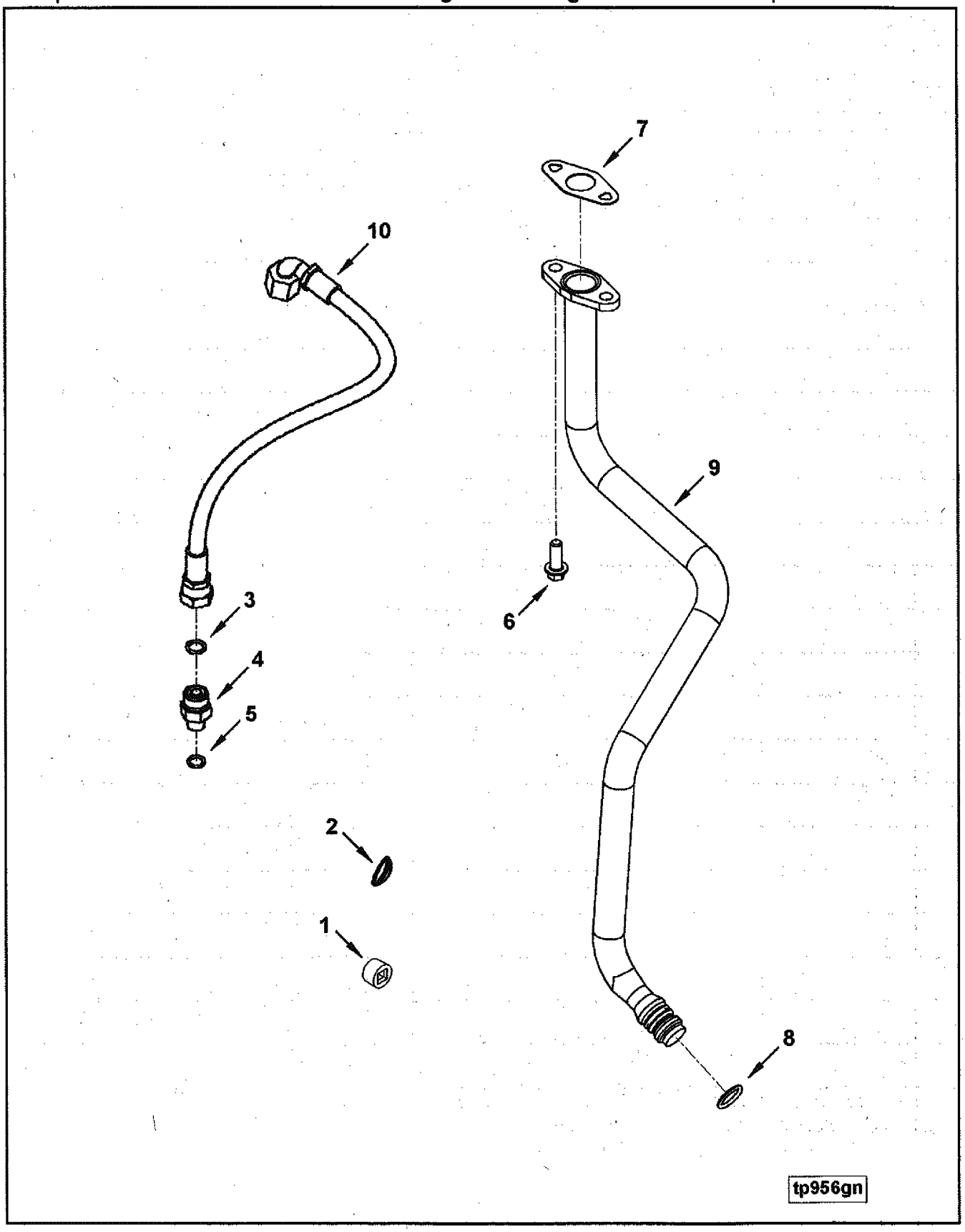
7
10
9
3
6
4
5
2
1
8
tp956gn

Ref No.	Part Number	Part Name	Req	Remarks
		TURBOCHARGER PLUMBING		
		OPTION TP97318		Turbocharger Plumbing
				Turbocharger Exhaust Location (mm): HMRO Turbocharger Type: Wastegate Oil Filter Mounted Location: Vertical Turbocharger Supply Line Routing: Inboard Block Drain Location: Front Drain Required Exhaust Manifold Type: Dry Bearing Housing Manufacturer: Holset Turbocharger Drain Line Type: Flexible Bearing Housing Cooling Provision: Oil Cooled
1	3008469	Plug, Pipe	1	3/4 NPT
2	3920706	Plug, Expansion	1	
	3922789	Connector, Male	2	
3	3678603	Seal, O Ring	1	
4	(3922790)	Connector, Male	1	M12 X 1.50 X 11/16 - 16
5	3922794	Seal, O Ring	1	
6	3941981	Screw, Hex Flange Head Cap	2	
7	3949499	Gasket, Oil Drain	1	
	3975076	Connection, Tur Oil Drain	1	
8	3928624	Seal, O Ring	2	
9	(3975077)	Connection, Tur Oil Drain	1	
10	3945679	Hose, Flexible	1	

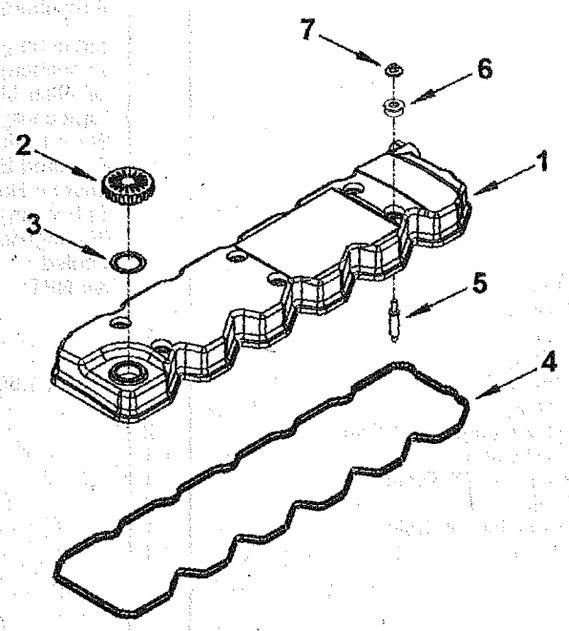

Ref No.	Part Number	Part Name	Req	Remarks
		VALVE COVER ARRANGEMENT		
		OPTION VC9304		Valve Cover Arrangement
				Compression Brake Compatible: No Fill Location: Front Integral Breather: Yes
	3976167	Cover, Valve	1	
1	3976168	Cover, Valve	1	
	4895459	Cap, Filler	1	
2	(4895460)	Cap, Filler	1	
3	4895461	Gasket, Filler Cap	1	
4	4899226	Gasket, Valve Cover	1	
5	4896991	Stud	6	
6	4899239	Isolator, Noise	6	
7	4893936	Nut, Hexagon Flange	6	

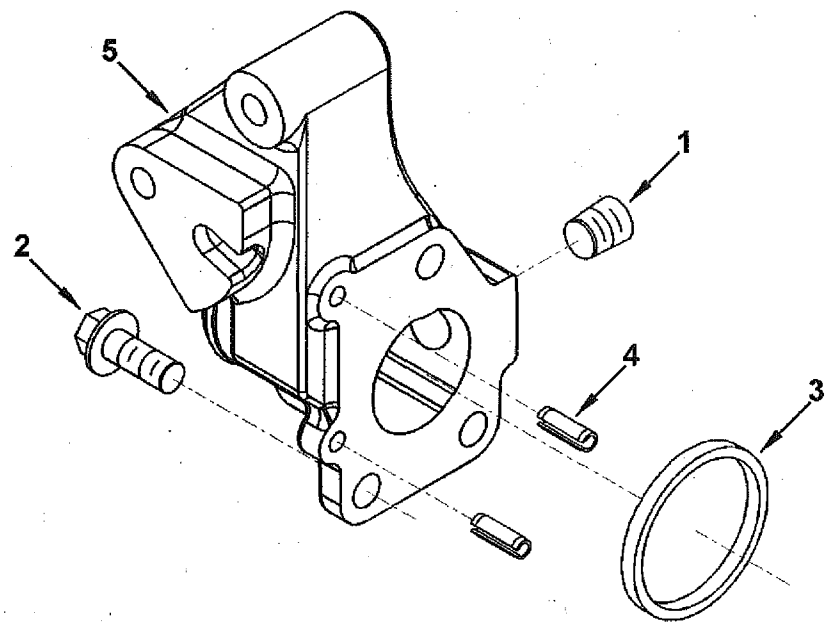

wi952gy

Ref No.	Part Number	Part Name	Req	Remarks
		WATER INLET CONNECTION		
		OPTION WI9178		Water Inlet Connection
				Connection Outside Diameter (mm): 50.8 Connection Type: Beaded Connection Location: Horizontal Out From Engine CL (mm): -242.0 From Crank CL (mm): 120.0 From FFOB (mm): -32 Mounting for Belt Tensioner: Yes Provision For Alternator Brace: Yes Tensioner Pivot Location (mm): X = -227.0 Y = 195.0 ER Plumbing Port Location: None
1	3008468	Plug, Pipe	1	1/2 NPT
2	3902460	Screw, Hex Flange Head Cap	3	M10 X 1.50 X 25
3	3906697	Seal, Rectangular Ring	1	
	3943990	Connection, Water Inlet	1	
4	131584	Pin, Roll	2	
5	(3943991)	Connection, Water Inlet	1	

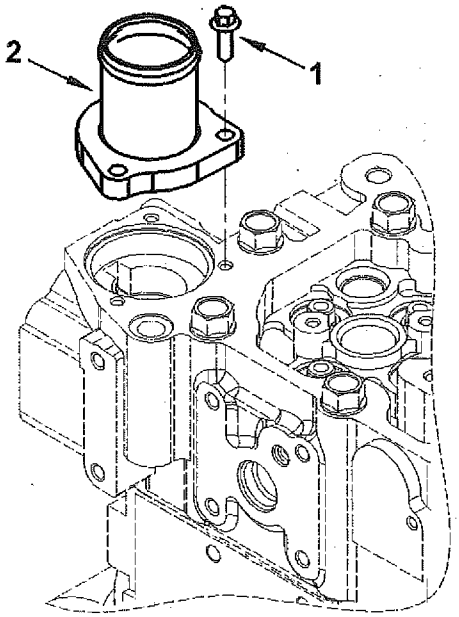

wo900zc

Ref No.	Part Number	Part Name	Req	Remarks
		WATER OUTLET CONNECTION		
		OPTION WO9026		Water Outlet Connecton
				Connection Orientation: Vertical Connection Outlet Diameter: 44.4 mm Connection Outlet Location From Coord System (mm): X = -103 Y = 486 Z = -44 Fan Center Capability (mm): < = 444
1	3901865	Screw, Hex Flange Head Cap	3	M6 X 1.00 X 20
2	3943300	Connection, Water Outlet	1	

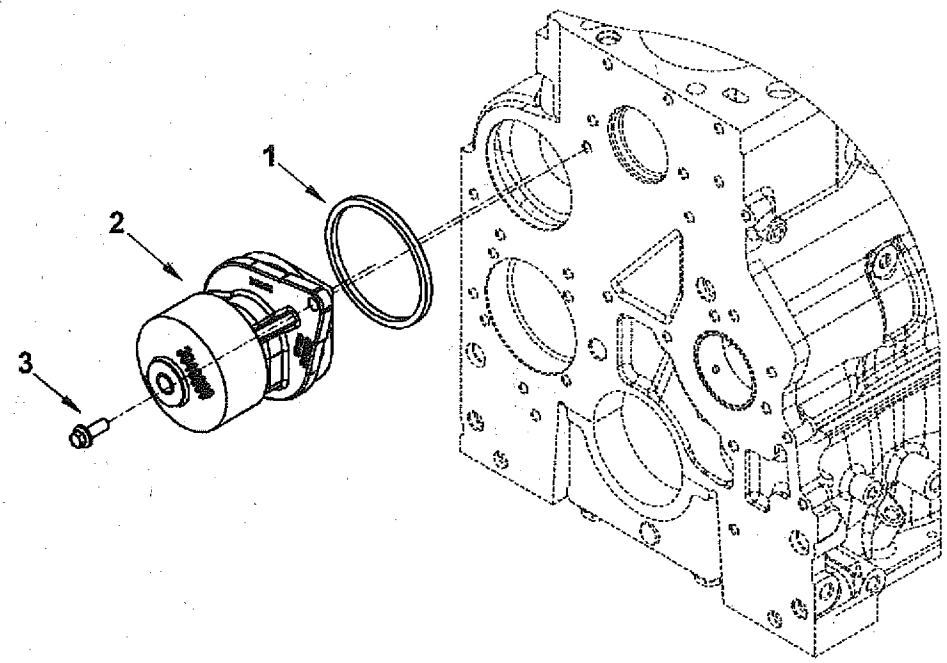

wp901zs

Ref No.	Part Number	Part Name	Req	Remarks
		WATER PUMP		
		OPTION WP9757		Water Pump
				Pulley Type: Standard Pulley Diameter: 88 Pulley Hardness: HRC 50 Water Pump Location From CL of Crank: -108 CL of Engine: 80 FFOB: 103.3
	3800984	Pump, Water	1	Recon Equivalent 3800984 RX
1	3906698	Seal, Rectangular Ring	1	
2	(4891252)	Pump, Water	1	
3	3093730	Screw, Hex Flange Head Cap	2	

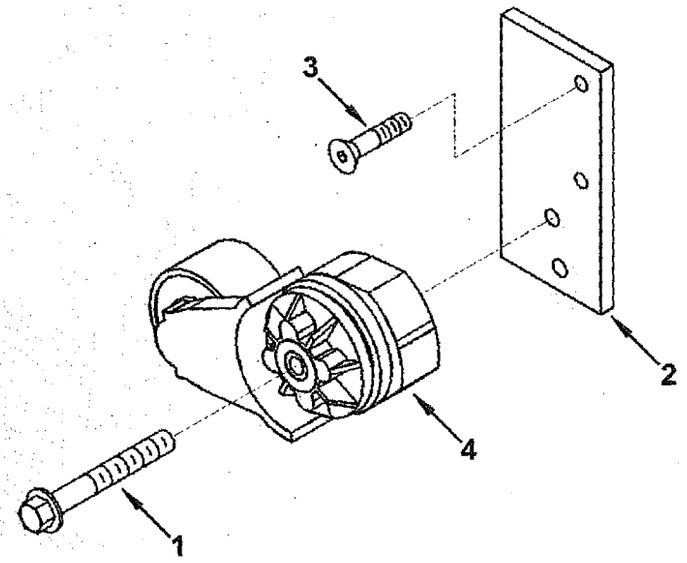

wp952gq

Ref No.	Part Number	Part Name	Req	Remarks
		BELT TENSIONER		
		OPTION WP97048		Belt Tensioner Tensioner Mounting Location: Bracket on Cylinder Head Tensioner Pulley CL From From Engine CL (mm): -191.1 Tensioner Pulley CL From Crank CL (mm): 282.8 Tensioner Pulley Diameter Over 2.5 mm Gauge Balls (mm): 73.95 Pulley Type: Grooved
1	3282081	Screw, Hex Flange Head Cap	1	M10 X 1.50 X 75
2	3920283	Bracket, Belt Tensioner	1	
3	3925186	Screw, Flat Head Cap	2	
4	3976831	Tensioner, Belt	1	

NOTES

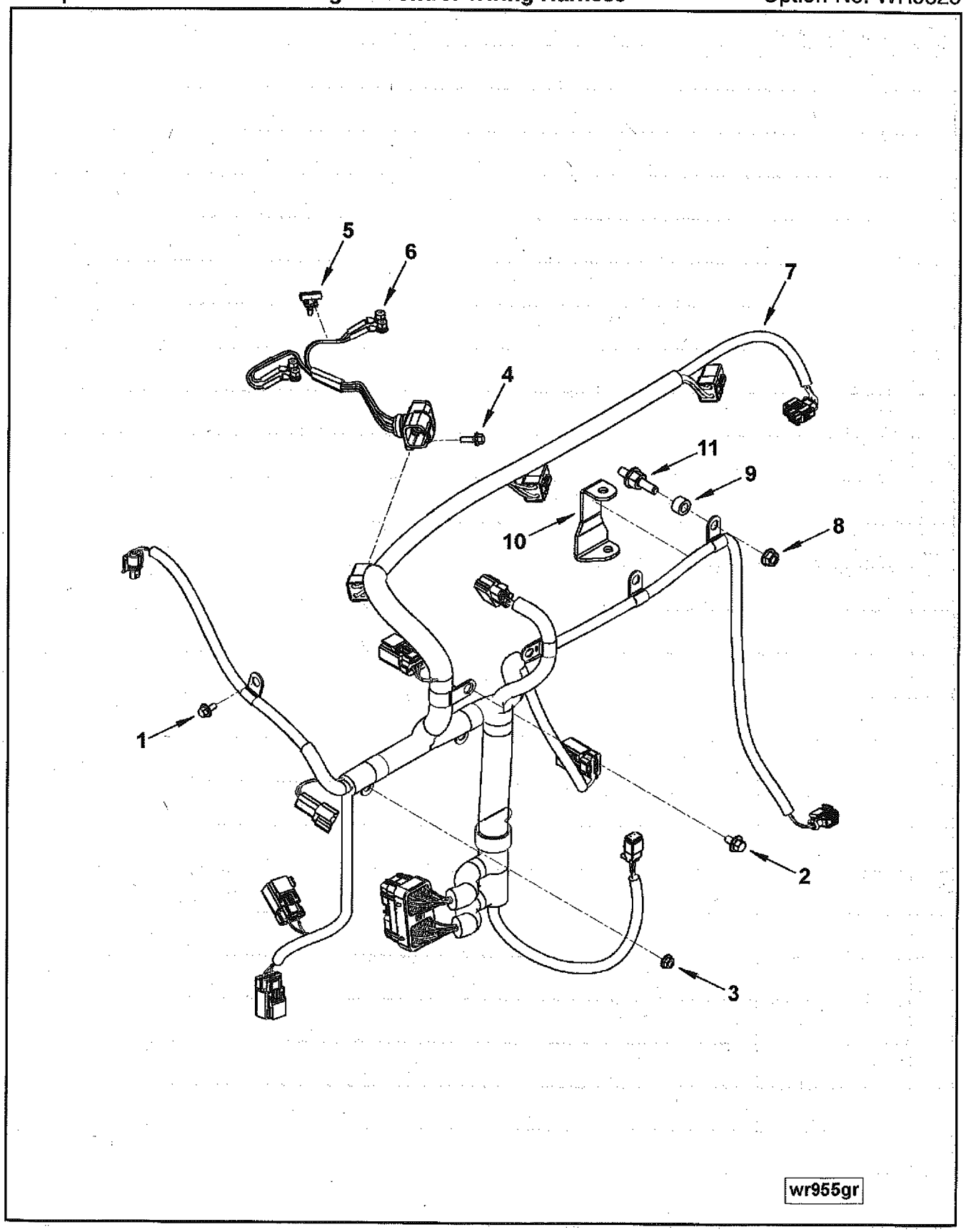
5
6
7
4
11
9
10
8
1
2
3
wr955gr

Ref No.	Part Number	Part Name	Req	Remarks
		ENGINE CONTROL WIRING HARN		
		OPTION WR9325		Engine Control Wiring Harness
				Turbocharger Type: Wgt - All OEM Connector Location (mm): Vertical From Crank to CL: 225.3 Horizontal Rrom Engine to CL: 233.4 Horizontal From FFOB to CL: -81.8 OEM Connector Type: 50 Pin J1939 Connector Location: On Harness Vertical From Crank to CL (mm): 136.7 Horizontal From Engine to CL (mm): 233.4 Horizontal From FFOB to CL (mm): -81.8 ECM Location: Fuel Pump Side - Front Speed Sensor Location: Damper Pulley Voltage: 12 or 24 ECM type: CM850
1	3093956	Screw, Hex Flange Head Cap	2	M8 X 1.25 X 12
2	3900626	Screw, Hex Flange Head Cap	2	M6 X 1.00 X 12
3	3906216	Nut, Hexagon Flange	4	M6 X 1.00
4	3913638	Screw, Hex Flange Head Cap	3	M6 X 1.00 X 16
5	3963736	Clip, Wire Retaining	6	
6	3966805	Harness, Wiring	3	
7	3976418	Harness, Etr Cnt Mdl Wrg	1	
8	3900589	Nut, Hexagon Flange	2	M8 X 1.25
9	3918363	Spacer, Mounting	2	
10	3979319	Brace, Wiring	2	
11	4929065	Screw, Hex Flange Head Cap	1	

Lower Engine Gasket Set

Ref No.	Part Number	Part Name	Req	Remarks
		LOWER ENGINE GASKET SET		
	4955230	Set, Lower Engine Gasket	1	
	4890832	Seal, Oil	1	
	3939258	Gasket, Cover Plate	1	
	3963988	Washer, Sealing	1	
	3963990	Washer, Sealing	7	
	3909411	Rear Crank Seal Serv.Kit	A/R	
	2830409	Seal, O Ring	1	
	4898372	Seal, O Ring	1	
	4891288	Gasket, Oil Drain	1	
	3906697	Seal, Rectangular Ring	2	
	3906698	Seal, Rectangular Ring	1	
	3906252	Seal, Rectangular Ring	1	
	4895710	Seal, O Ring	1	
	3929457	Seal, O Ring	1	
	(3974127)	Gasket, Filter Head	1	Serviced as 3977913
	(2830559)	Gasket, Oil Cooler Core	1	Serviced as 3977913
	3902425	Washer, Sealing	1	
	3939357	Gasket, Cover Plate	1	
	3949562	Gasket, Flange	1	

Ref No.	Part Number	Part Name	Req	Remarks
		SERVICE KITS		
	4955230	Set, Lower Engine Gasket	A/R	
	4955229	Set, Upper Engine Gasket	A/R	
	4089149	Kit, Cyl Block Hardware	A/R	
	3800974	Kit, Water Pump	A/R	Recon equivalent 3800974 RX
	3926126	Kit, Wear Sleeve	A/R	Rear Seal
	3802820	Kit, Wear Sleeve	A/R	Front Seal
	3802924	Kit, Intake Valve	A/R	
	3802967	Kit, Exhaust Valve	A/R	
	4089342	Kit, Crankshaft Seal	A/R	
	3926162	Pump, Fuel Injection	A/R	
		MAIN BEARING KITS		
	3357480	Set, Main Bearing (STD)	A/R	Standard
	3802071	Set, Main Brg(.010)	A/R	0.25 mm Oversize
	3802072	Set, Main Brg(.020)	A/R	0.50 mm Oversize
	3802073	Set, Main Brg(.030)	A/R	0.75 mm Oversize
	3802074	Set, Main Brg(.040)	A/R	1.00 mm Oversize
		SERVICE ITEMS PURCHASED FROM FLEETGUARD		
	(3937736)	Cartridge, Lub Oil Filter	A/R	Purchase From Fleetguard
	(3973233)	Filter, Fuel	A/R	Fleetguard P/N FS19732
	(3975404)	Head, Fuel Filter	A/R	Purchase From Fleetguard
	(3978040)	Filter, Fuel	A/R	Purchase From Fleetguard
	(3969680)	Head, Fuel Filter	A/R	Purchase From Fleetguard

Upper Engine Gasket Set

Ref No.	Part Number	Part Name	Req	Remarks
		UPPER ENGINE GASKET SET		
	4955229	Set, Upper Engine Gasket	1	
	3969988	Gasket, Connection	2	
	3947530	Gasket, Int Manifold Cover	1	
	3976371	Seal, Injector	6	
	3977393	Seal, O Ring	6	
	4932210	Gasket, Cylinder Head	1	
	3949530	Gasket, Turbocharger	1	
	4899231	Gasket, Rkr Lever Housing	1	
	4931365	Gasket, Oil Drain	1	
	4891288	Gasket, Oil Drain	1	
	3928624	Seal, O Ring	2	
	3678603	Seal, O Ring	1	
	3922794	Seal, O Ring	1	
	4899226	Gasket, Valve Cover	1	
	3906698	Seal, Rectangular Ring	1	
	3963988	Washer, Sealing	1	
	3963990	Washer, Sealing	7	
	3963983	Washer, Sealing	5	
	3678925	Seal, O Ring	1	
	2830409	Seal, O Ring	1	
	4898372	Seal, O Ring	1	
	3955339	Gasket, Exhaust Manifold	1	
	3954829	Seal, Thermostat	1	
	4896897	Gasket, Acc Drive Cover	1	
	4010643	Seal, O Ring	1	
	(3867646)	Seal, O Ring	1	

Option Index

Option No.	Description	Page No.
AH9148	Air Heater Starting Aid	2
AP9432	Agency Approval	3
BB9118	Crankshaft and Bearings	7
	Cylinder Block	5
	Valve Tappets	8
BB9131	Rear Gear Housing	9
BR9191	Crankcase Breather	10
CH9070	Coolant Heater Starting Ai	11
DA9181	Vibration Damper	12
DR9701	Rear Gear Train Accessory	13
EC9044	Thermostat	14
FF9573	Fuel Filter Plumbing	15
FF9579	Fuel Filter	17
FH9481	Flywheel Housing	19
FI9053	Fuel Inlet Fitting	20
FP90312	Fuel Pump	23
FS9843	Fuel System Accessories	25
FT9111	Fuel Plumbing	27
FW9704	Flywheel Mounting	28
GG9816	Front Gear Cover	31
HC9026	Cabin Heater Plumbing	32
IC9368	Air Intake Connection	33
IC9453	Intake Connection Mounting	34
IM9061	Air intake Manifold	37
LA9106	Lifting Arrangement	38
LA9108	Lifting Arrangement	39
LC9244	Engine Oil Cooler	41
LF9138	Lube Oil Filter	42
LG90115	Oil Level Gauge	45
LP9057	Lubrication Oil Pump	46
OB9343	Oil Filler Arrangement	47
OP9456	Oil Pan	49
PH9075	Engine Control Module	51
PH9094	Engine Control Module Loca	52
PP8611	Camshaft	56
	Connecting Rod and Piston	55
	Injector	57
PP98490	Cylinder Head	59
PP98665	Turbocharger	60
PP98668	Injector Plumbing	63
RL9765	Rocker Lever	65
RP9046	Engine Coolant Vent	66
TB91059	Turbocharger Arrangement	67
TK9019	Torque Converter Oil Coole	68
TP97318	Turbocharger Plumbing	71
VC9304	Valve Cover Arrangement	72
WI9178	Water Inlet Connection	73
WO9026	Water Outlet Connection	74
WP9757	Water Pump	75
WP97048	Belt Tensioner	76
WR9325	Engine Control Wiring Harn	79

INDEX

Part No.	Description	Page No.
131584	Pin, Roll	73
145528	Seal, O Ring	10
145530	Seal, O Ring	10
203131	Nut, Heavy Hexagon	65
2830409	Seal, O Ring	80, 82
2830559	Gasket, Oil Cooler Core	41, 80
2830977	Seal, O Ring	23
2831066	Collar, Shaft	7
3007632	Plug, Expansion	59
3007635	Plug, Expansion	5
3008466	Plug, Pipe	32
3008468	Plug, Pipe	32, 73
3008469	Plug, Pipe	5, 11, 13, 19, 68, 71
3025806	Screw, Socket Head Cap	49
3089188	Screw, Hex Flange Head Cap	19
3089238	Plug, Threaded	68
3089239	Plug, Threaded	68
3089240	Seal, O Ring	68
3089567	Plug, Threaded	13
3089568	Plug, Threaded	13
3093730	Screw, Hex Flange Head Cap	56, 75
3093956	Screw, Hex Flange Head Cap	51, 63, 79
3281692	Screw, Drive	3
3282081	Screw, Hex Flange Head Cap	76
3282266	Plug, Threaded	49
3283065	Bearing, Crankshaft Thrust	7
3283066	Bearing, Crankshaft Thrust	7
3283067	Bearing, Crankshaft Thrust	7
3283068	Bearing, Crankshaft Thrust	7
3284216	Screw, Flat Head Cap	51
3287561	Washer, Sealing	49
3357480	Set, Main Brg	7, 81
3408529	Sensor, Position	51
3408530	Sensor, Position	51
3678602	Plug, Threaded	27
3678603	Seal, O Ring	27, 71, 82
3678610	Plug, Threaded	27
3678786	Seal, O Ring	5, 68
3678791	Plug, Threaded	5
3678791	Plug, Threaded	68
3678873	Plug, Threaded	5, 68
3678912	Seal, O Ring	5
3678921	Plug, Threaded	37
3678923	Plug, Threaded	5, 17, 25
3678924	Plug, Threaded	5
3678924	Plug, Threaded	17, 25
3678925	Seal, O Ring	5, 17, 25, 82
3679139	Seal, O Ring	13
3680419	Plug, Threaded	5
3680420	Plug, Threaded	5
3800984	Pump, Water	75
3802071	Set, Main Brg(.010	7, 81
3802072	Set, Main Brg(.020	7, 81
3802073	Set, Main Brg(.030	7, 81
3802074	Set, Main Brg(.040	7, 81
3802820	Kit, Wear Sleeve	7, 81
3802924	Kit, Intake Valve	59, 81
3802967	Kit, Exhaust Valve	59, 81
3818823	Stud	60
3818824	Nut, Hexagon Flange	60
3867646	Seal, O Ring	82
3900068	Dowel, Ring	5
3900269	Washer, Plain	28
3900589	Nut, Hexagon Flange	23, 79
3900626	Screw, Hex Flange Head Cap	79
3900628	Screw, Hex Flange Head Cap	57
3900630	Screw, Hex Flange Head Cap	23
3900632	Screw, Hex Flange Head Cap	17, 27
3900633	Screw, Hex Flange Head Cap	63, 65
3900677	Screw, Hexagon Head Cap	46
3900678	Screw, Hex Flange Head Cap	49, 51
3900679	Screw, Hex Flange Head Cap	19
3900955	Plug, Expansion	5, 45
3900956	Plug, Expansion	5
3900958	Plug, Expansion	5, 47
3901171	Bearing, Connecting Rod	55
3901172	Bearing, Connecting Rod	55
3901173	Bearing, Connecting Rod	55
3901174	Bearing, Connecting Rod	55
3901249	Screw, Hex Flange Head Cap	39
3901395	Screw, Hexagon Head Cap	28
3901445	Screw, Hex Flange Head Cap	9, 17, 31, 41, 51, 52
3901865	Screw, Hex Flange Head Cap	74
3902112	Screw, Hex Flange Head Cap	27
3902114	Screw, Hex Flange Head Cap	31
3902343	Dowel, Ring	5
3902425	Washer, Sealing	80
3902460	Screw, Hex Flange Head Cap	5, 39, 73
3903035	Screw, Banjo Connector	25, 27
3903096	Screw, Hex Flange Head Cap	65
3903112	Screw, Hex Flange Head Cap	9
3903464	Screw, Hex Flange Head Cap	19
3903990	Screw, Hex Flange Head Cap	39
3904166	Sleeve, Salvage	5
3904181	Plug, Threaded	19
3904483	Dowel, Pin	7, 56
3905401	Plug, Expansion	5, 47
3906216	Nut, Hexagon Flange	79
3906252	Seal, Rectangular Ring	80
3906391	Screw, Socket Head Cap	51
3906619	Plug, Pipe	41
3906697	Seal, Rectangular Ring	73, 80
3906698	Seal, Rectangular Ring	75, 80, 82
3909409	Tool, Seal Installation	19
3909411	Rear Crank Seal Serv.Kit	80
3910248	Plug, O Ring	19
3910260	Seal, O Ring	19
3910495	Screw, Hex Flange Head Cap	9, 13
3913638	Screw, Hex Flange Head Cap	79

INDEX

Part No.	Description	Page No.
3914035	Plug, Expansion	59
3914177	Screw, Hex Flange Head Cap	19
3914868	Plate, Cover	13
3917995	Clamp, Spring Hose	10
3918109	Screw, Hex Flange Head Cap	37
3918153	Screw, Hex Flange Head Cap	9
3918363	Spacer, Mounting	79
3918614	Hose, Plain	10
3920283	Bracket, Belt Tensioner	76
3920691	Ring, Retaining	55
3920706	Plug, Expansion	59, 71
3920854	Screw, Captive Washer Cap	51
3921816	Screw, Hex Flange Head Cap	5
3921836	Connection, Air Intake	33
3922072	Plug, Expansion	5, 11
3922789	Connector, Male	71
3922790	Connector, Male	71
3922794	Seal, O Ring	71, 82
3925009	Spring, Compression	41
3925186	Screw, Flat Head Cap	76
3925234	Plate, Cover	19
3925883	Screw, Hex Flange Head Cap	19, 56, 63
3926126	Kit, Wear Sleeve	7, 81
3926972	Screw, Hex Flange Head Cap	34
3927063	Screw, Hex Flange Head Cap	59
3927772	Bearing, Crankshaft Thrust	7
3927948	Screw, Hex Flange Head Cap	5
3928624	Seal, O Ring	71, 82
3929016	Bearing, Main	7
3929017	Bearing, Main	7
3929018	Bearing, Main	7
3929019	Bearing, Main	7
3929020	Bearing, Main	7
3929021	Bearing, Main	7
3929022	Bearing, Main	7
3929023	Bearing, Main	7
3929024	Bearing, Main	7
3929025	Bearing, Main	7
3929457	Seal, O Ring	41, 80
3931342	Dataplate	3
3935892	Shaft, Rocker Lever	65
3935945	Retainer, Socket	65
3935946	Socket, Rocker Lever	65
3936365	Valve, Pressure Relief	41
3937142	Seal, Injector	57
3937219	Lever, Rocker	65
3937220	Lever, Rocker	65
3937736	Cartridge, Lub Oil Filter	42, 81
3938036	Screw, Hex Flange Head Cap	37
3939258	Gasket, Cover Plate	23, 80
3939357	Gasket, Cover Plate	80
3940059	Bushing	5
3940123	Collet, Valve	59
3940734	Valve, Exhaust	59
3940735	Valve, Intake	59
3941253	Rod, Push	65
3941927	Lever, Rocker	65
3941928	Lever, Rocker	65
3941981	Screw, Hex Flange Head Cap	71
3942367	Adapter, Filter Head	41
3942730	Ball, Rocker Lever	65
3942734	Lever, Rocker	65
3942735	Lever, Rocker	65
3943161	Spring, Valve	59
3943198	Retainer, Valve Spring	59
3943300	Connection, Water Outlet	74
3943449	Insert, Valve	59
3943450	Insert, Valve	59
3943626	Crosshead, Valve	65
3943670	Fitting, Orifice	66
3943990	Connection, Water Inlet	73
3943991	Connection, Water Inlet	73
3944458	Hose, Flexible	25
3944593	Screw, Hex Flange Head Cap	67
3945094	Plug, Expansion	59
3945095	Plug, Expansion	59
3945252	Spacer, Mounting	67
3945679	Hose, Flexible	71
3946625	Retainer, Inj Ful Sup Cnr	63
3946947	Plug, Threaded	41
3947092	Insert, Threaded	5
3947206	Screw, Hex Flange Head Cap	51
3947287	Plunger, Prs Regulator	41
3947530	Gasket, Int Manifold Cover	37, 82
3947540	Seal, O Ring	63
3947759	Tappet, Valve	8
3948083	Plate, Cover	23
3949326	Dowel, Ring	5, 31
3949473	Gasket, Connection	33
3949499	Gasket, Oil Drain	71
3949530	Gasket, Turbocharger	60, 82
3949562	Gasket, Flange	80
3954099	Camshaft	56
3954100	Camshaft	56
3954111	Dowel, Ring	56
3954145	Adapter, Fuel Connector	20
3954498	Stud	23
3954616	Dowel, Ring	9
3954786	Harness, Wiring	25
3954829	Seal, Thermostat	14, 82
3955034	Head, Lub Oil Filter	41
3955069	Ring, Speed Indicator	56
3955080	Connection, Fuel Block	27
3955081	Support, Filter	17
3955150	Gear, Crankshaft	7
3955151	Gear, Crankshaft	7
3955153	Gear, Fuel Pump	23
3955171	Coupling, Plain Hose	27
3955219	Isolator, Vibration	51
3955220	Isolator, Vibration	51
3955339	Gasket, Exhaust Manifold	67, 82
3955393	Seal, Valve Stem	59
3957290	Valve, Check	27
3957849	Screw, Socket Head Cap	51
3959128	Screw, Rkr Lever Adjusting	65
3963443	Tube, Oil Gauge	45
3963736	Clip, Wire Retaining	79
3963983	Washer, Sealing	20, 25, 27, 82
3963984	Washer, Sealing	27
3963988	Washer, Sealing	80, 82
3963990	Washer, Sealing	80, 82
3964337	Connector, Qck Disconnect	15, 27

INDEX

Part No.	Description	Page No.
3964817	Screw, Banjo Connector	55
3964908	Support, Rocker Lever	65
3965153	Head, Lub Oil Filter	41
3965159	Module, Electronic Control	51
3965349	Cover, Front	31
3965764	Plate, Cyl Block Stiffener	5
3966164	Breather, Crankcase	10
3966805	Harness, Wiring	79
3967048	Pin, Piston	55
3968075	Screw, Captive Washer Cap	12
3968164	Crankshaft, Engine	7
3968786	Tube, Breather	10
3968877	Nozzle, Piston Cooling	55
3968926	Injector	57
3968927	Injector	57
3969562	Bearing, Connecting Rod	55
3969680	Head, Fuel Filter	17
3969988	Gasket, Connection	2, 82
3970000	Heater, Intake Air	2
3970042	Seal, O Ring	10
3970519	Ring, Oil Piston	55
3970548	Seal, Oil	19
3971012	Housing, Gear	9
3971015	Housing, Gear	9
3971211	Rod, Engine Connecting	55
3971212	Rod, Engine Connecting	55
3971297	Ring, Compression Piston	55
3971371	Tube, Breather	10
3971544	Pump, Lubricating Oil	46
3971559	Tube, Fuel Transfer	63
3971631	Housing, Flywheel	19
3971767	Head, Cylinder	59
3971792	Head, Cylinder	59
3971793	Head, Cylinder	59
3973088	Housing, Flywheel	19
3973157	Cover, Intake Manifold	37
3973233	Filter, Fuel	25, 81
3973401	Tube, Injector Fuel Supply	63
3973402	Tube, Injector Fuel Supply	63
3973404	Tube, Injector Fuel Supply	63
3973406	Tube, Injector Fuel Supply	63
3973422	Manifold, Exhaust	67
3973835	Thermostat	14
3973938	Manifold, Fuel	63
3974091	Manifold, Fuel	63
3974092	Sensor, Pressure	63
3974093	Valve, Pressure Relief	63
3974127	Gasket, Filter Head	41, 80
3974156	Cap, Main Bearing	5
3974157	Cap, Main Bearing	5
3974158	Cap, Main Bearing	5
3974159	Cap, Main Bearing	5
3974371	Thermostat	14
3974538	Crankshaft, Engine	7
3974635	Crankshaft, Engine	7
3974765	Connector, Qck Disconnect	23
3974880	Tube, Fuel Drain	27
3975076	Connection, Tur Oil Drain	71
3975077	Connection, Tur Oil Drain	71
3975110	Block, Cylinder	5
3975125	Filter, Fuel	17
3975126	Filter, Fuel	25
3975396	Adapter, Filter Head	17
3975404	Head, Fuel Filter	25, 81
3975405	Adapter, Filter Head	25
3975535	Connection, Adapter	37
3975700	Pump, Fuel Injection	23
3975701	Pump, Fuel Injection	23
3975702	Connector, Inj Fuel Supply	63
3975703	Connector, Inj Fuel Supply	63
3975796	Plug, Expansion	5
3975818	Cooler, Oil	41
3975868	Piston, Engine	55
3975957	Block, Cylinder	5
3976167	Cover, Valve	72
3976168	Cover, Valve	72
3976339	Ring, Compression Piston	55
3976371	Seal, Injector	82
3976418	Harness, Etr Cnt Mdl Wrg	79
3976831	Tensioner, Belt	76
3976865	Screw, Hex Flange Head Cap	37
3976993	Dipstick	45
3976994	Dipstick	45
3977282	Bracket, Lifting	38
3977324	Bracket, Etr Cnt Module	51
3977325	Support, Etr Cnt Module	51
3977357	Wire, Ground	51
3977393	Seal, O Ring	82
3977572	Screw, Round Head Cap	10
3977790	Tube, Lub Oil Suction	49
3977926	Damper, Vibration	12
3978040	Filter, Fuel	17
3978072	Gasket, Connection	37
3978381	Gasket, Cylinder Head	59
3978703	Tube, Fuel Supply	15
3978704	Tube, Fuel Supply	15
3978706	Tube, Fuel Supply	15
3979319	Brace, Wiring	79
3990127	Screw, Hex Flange Head Cap	65
4010519	Seal, O Ring	51
4010643	Seal, O Ring	51, 82
4036534	Turbocharger	60
4076493	Sensor, Pressure	51
4076930	Switch, Pressure	51
4076931	Switch, Pressure	51
4088750	Sensor, Temperature	51
4088751	Sensor, Temperature	51
4089149	Kit, Cyl Block Hardware	5, 81
4089342	Kit, Crankshaft Seal	19, 81
4089425	Tool, Seal Installation	19
4890634	Nut, Regular Hexagon	23
4890635	Washer, Spring	23
4890832	Seal, Oil	31, 80
4890926	Seal, O Ring	57
4891178	Bushing	55
4891179	Screw, Connecting Rod Cap	55
4891252	Pump, Water	75
4891288	Gasket, Oil Drain	80, 82
4891385	Washer, Sealing	15, 23, 27
4892795	Bearing, Connecting Rod	55
4892796	Bearing, Connecting Rod	55
4892797	Bearing, Connecting Rod	55
4892798	Bearing, Connecting Rod	55
4893693	Bearing, Connecting Rod	55
4893936	Nut, Hexagon Flange	72
4894100	Bracket, Lifting	38
4895459	Cap, Filler	72
4895460	Cap, Filler	72
4895461	Gasket, Filler Cap	72
4895710	Seal, O Ring	80
4895877	Screw, Socket Head Cap	56
4896380	Gear, Camshaft	56

INDEX

Part No.	Description	Page No.	Part No.	Description	Page No.
4896897	Gasket, Acc Drive Cover	13, 82			
4896991	Stud	72			
4897457	Support, Camshaft Thrust	56			
4897858	Adapter, Oil Pan	49			
4897861	Gasket, Oil Pan	49			
4898036	Pan, Oil	49			
4898037	Pan, Oil	49			
4898301	Gasket, Oil Suc Connection	49			
4898372	Seal, O Ring	80, 82			
4899226	Gasket, Valve Cover	72, 82			
4899231	Gasket, Rkr Lever Housing	65, 82			
4899235	Housing, Rocker Lever	65			
4899239	Isolator, Noise	72			
4899245	Sleeve	65			
4899257	Housing, Rocker Lever	65			
4899288	Clip	15			
4899498	Plate, Clamping	10			
4899706	Screw, Round Head Cap	10			
4903285	Sensor, Prs Temperature	51			
4903286	Sensor, Prs Temperature	51			
4903482	Seal, O Ring	51			
4929065	Screw, Hex Flange Head Cap	79			
4929128	Insert, Threaded	9			
4931365	Gasket, Oil Drain	82			
4932210	Gasket, Cylinder Head	82			
4955229	Set, Upper Engine Gasket	81, 82			
4955230	Set, Lower Engine Gasket	80, 81			

NOTES

Cummins Customized Parts Catalog

Cummins is pleased to announce the availability of a parts catalog compiled specifically for you. Unlike the generic versions of parts catalogs that support general high volume parts content; Cummins Customized catalogs contain only the new factory parts that were used to build your engine.

The catalog cover, as well as the content, is customized with you in mind. You can use it in your shop, at your worksite, or as a coffee table book in your RV or boat. The cover contains your name, company name, address, and telephone number. Your name and engine model identification even appears on the catalog spine. Everybody will know that Cummins created a catalog specifically for you.

This new catalog was designed to provide you with the exact information you need to order parts for your engine. This will be valuable for customers that do not have easy access to the Cummins Electronic Parts Catalog or the Cummins Parts Microfilm System.

Additional Features of the Customized Catalog include:

- Engine Configuration Data
- Table of Contents
- Separate Option and Parts Indexes
- Service Kits (when applicable)
- ReCon Part Numbers (when applicable)

ORDERING THE CUSTOMIZED PARTS CATALOG

Ordering by Telephone:

North American customers can contact their Cummins Distributor or call Gannett Direct Marketing Services at 800-646-5609 and order by credit card. Outside North America order on-line or make an International call to Gannett at +-+-502-454-6660

Ordering On-Line

The Customized Parts Catalog can be ordered On-Line from the Cummins Powerstore by credit card. Contact the Powerstore at **WWW.POWERSTORE.CUMMINS.COM**

Contact GDMS or the CUMMINS POWERSTORE for the current price; Freight may be an additional expense.

Information we need to take your Customized Parts Catalog Order. This information drives the cover content of the CPC.

- Customer Name
- Street Address
- Company Name (optional)
- Telephone No.
- Credit Card No.
- Cummins Engine Serial Number (located on the engine data plate)

Unfortunately not all Cummins Engines can be supported by this parts catalog. Engines older than 1984 or newer than 3 months may not have the necessary parts information to compile a catalog. We will contact you if this occurs and explain why we are unable to fill your order.

Customized Parts Catalogs are produced specifically for a single customer. This means they are not returnable for a refund. If we make an error and your catalog is not useable, we will correct that error by sending you a new catalog.

Cummins Inc.
Box 3005
Columbus, Indiana, U.S.A., 47202

Registered Office
Cummins Engine Company, Ltd
Unit 1-B Uniongate, Ridgeway Trading Estate,
Iver,
Buckinghamshire SL0 9HX,
England
Registration 573951 England

Bulletin 4056556-01
Printed in U.S.A. 10/05

1548